BLUESTAR®

Unleash Your Inner Chef®

Induction Range

User Manual

Installation and
Use and Care Information

Part # 100799 – revision 0

© Prizer-Painter Stove Works, Blandon, PA 19510

Thank You and Welcome

Thank you for your purchase and welcome to the BlueStar family!

BlueStar appliances are designed for discerning home chefs who demand restaurant-quality results in their own kitchens. As the owner of a new BlueStar appliance, you can look forward to years of precise and even cooking in your home kitchen.

Here are a few tips to get started:

1. Review this User Manual, which includes instructions and tips for getting the most out of your new appliance.
2. Register your appliance online at www.bluestarcooking.com/support/product-registration to stay in touch and allow us to send you valuable product news and updates.
3. Review our products and help us spread the word at https://www.bluestarcooking.com/inspiration/reviews.

Thank you again for choosing BlueStar.

Contents

Safety Information 5

Site Preparation 11

Installation Instructions 17

Product Description 20

Before Your First Use 22

Touch Screen Control 24

Touch Screen Control—Modes 26

Touch Screen Control—Settings 28

Cooktop Control 30

Cooktop Control—Functions 31

Operation 34

Cooking Guide and Tips 37

Common Baking Problems and Solutions 45

Care and Cleaning 46

Troubleshooting 48

Warranty 50

Product Information

Important product information, including the model and serial numbers, can be found on the serial plate, which is located on the upper left corner behind the oven door.

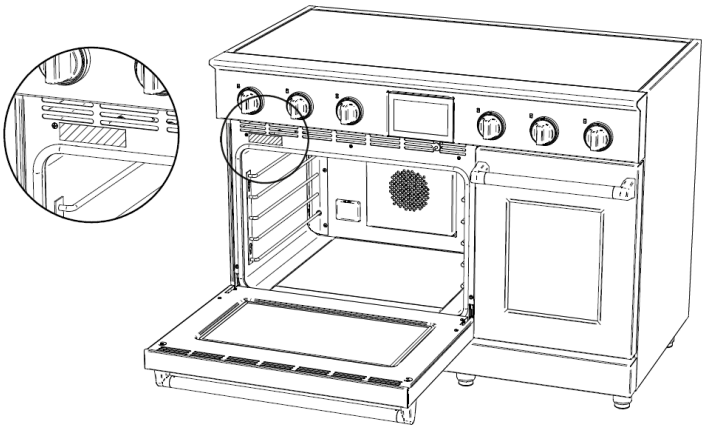

Please complete the information below for warranty purposes and future reference:

Model Number _____

Serial Number _____

Installation Date _____

Dealer's Name _____

Dealer's Phone Number _____

If service is required under warranty, it must be performed by an authorized BlueStar service company. To locate an authorized BlueStar service company in your area, go to www.bluestarcooking.com/support/find-a-service-center.

Safety Information

Please read and comply with the following safety messages to ensure your cooking product is installed and operated as safely as possible.

DANGER states a hazard that will cause serious injury or death if precautions are not followed.

WARNING states a hazard that can cause serious injury or death if precautions are not followed.

CAUTION states a hazard that can cause minor injury or product damage if instructions are not followed.

This appliance is designed for easy installation and operation, however we recommend that you read all sections of this manual before installation and first use.

Electrical Requirements and Grounding Instructions
Installation and service must be performed by a qualified installer, service agency, or utility company.

Important: Installation must conform with local codes or, in the absence of local codes, to the National Electrical Code NFPA70.

The installation of appliances designed for manufactured (mobile) home installation must conform to the Manufactured Home Construction and Safety Standard, Title 24 CFR, Part 3280, or, when this standard is not applicable, refer to: ANSI/NCSBCS A225.1 or with local codes as applicable.

The installation of appliances designed for Recreation Park Trailers must conform with state and local codes, or, in the absence of such codes, to the standard for Recreational Park Trailers ANSI A119.5.

⚠ WARNING

To reduce the risk of fire, electric shock, serious injury, or death when using your appliance, follow basic safety precautions, including the following:

- Read the provided user manual before operating this appliance.
- This product is to be used only for cooking tasks expected of a home appliance. This product is not intended for commercial use.
- If your product is found to be damaged upon receipt, contact your dealer or builder immediately. Do not install or use a damaged appliance or if the conduit is damaged.
- Do not install, repair, or replace any part of the appliance yourself unless specifically recommended in the literature accompanying it. All other service must be performed by a qualified service technician.
- Electric power to the appliance must be turned off at the circuit breaker or fuse box prior to performing any type of service or installation.
- This appliance must be properly installed and grounded by a qualified installer according to these installation instructions prior to use. The installer must show the customer the location of the circuit breaker panel or fuse box so that they know where and how to turn off electric power to the appliance. BlueStar is not responsible for service required to correct a faulty installation. The owner is responsible to make sure this appliance is properly installed.
- To avoid electric shock hazard, do not install this appliance outside or near water. Do not install or use this appliance if it has been exposed to water.
- Do not obstruct any venting areas or slots. The appliance must be installed in a manner which will keep the area below the door unobstructed to allow free air flow.
- Do not tamper with the controls. Do not adjust or alter any part of the appliance unless specifically instructed to do so by this manual.
- Secure the appliance to the cabinet following the direction in the installation instructions to prevent injury due to the unit tipping forward.

⚠ WARNING

To reduce the risk of fire, electric shock, serious injury, or death when using your appliance, follow basic safety precautions, including the following:

- To prevent damage, do not use the oven handles as lift points or for moving the appliance
- Do not climb or sit on any part of the appliance.
- Do not use the oven door for stepping, leaning, or sitting on at any time, Damage to the appliance and/or personal injury can occur.
- Keep packaging materials away from children. Plastic sheets and bags can cause suffocation.
- Do not leave children or pets alone or unattended in the area around the appliance. Do not allow children to play with the controls, pull on the handle, or touch other parts of the appliance
- Caution: Do not store items of interest to children above the appliance. Children can be burned or injured while climbing on the appliance.
- Install a smoke detector near the kitchen.
- Do not use water on grease fires. Smother any flames with a lid, cookie sheet, or flat tray. Use baking soda or a foam fire extinguisher to extinguish flaming grease. If a fire occurs, keep the oven door closed.
- Keep flammable items, such as paper, cardboard, plastic, and cloth away from hot surfaces. Do not put such items in the oven. Do not allow potholders to touch hot surfaces.
- Only use dry potholders to prevent steam burns when moving items in or out of the appliance. Do not use a towel or other bulky cloth in place of potholders.
- When using the oven, do not touch the heating elements or interior surfaces of the oven or the exterior area immediately surrounding the door. Heating elements may be hot even though they are dark in color. Interior oven surfaces can become hot enough to cause burns.
- Wear proper attire. Do not wear loose or hanging apparel while using the appliance. Do not allow clothing to come into contact with or within close proximity of any element or the interior of the oven and the surrounding areas during and immediately after use. Some synthetic materials are highly flammable and should not be worn while cooking.
- Do not use the oven for storage.
- Do not store combustible, flammable, or explosive materials in the oven or in adjacent cabinets.
- Never use the appliance for warming or heating the room.
- Do not line the oven with aluminum foil or other materials while cooking or cleaning.
- Do not leave metal objects, such as aluminum foil, the meat probe, cookie sheets, etc. on the bottom of the oven. Objects left on the bottom of the oven could damage the oven and the object.
- Use caution when opening the oven door. Let hot air or steam escape before removing or replacing food in the oven.
- Use caution when adding liquids to food or containers in a hot oven. Steam can cause serious burns or scalding.
- Do not heat unopened food containers. Build up of pressure may cause the container to burst and result in injury.
- Grease is flammable. Let hot grease cool before attempting to handle it. Avoid letting grease deposits collect. Clean after each use.
- Light lenses must always be in place when the oven is in use to protect the light bulbs from breakage.
- Oven racks are to be positioned when the oven is cool to prevent burns. If a rack must be moved while the oven is hot, do not let the potholder contact hot heating elements in the oven.
- Be sure all appliance controls are turned off and the appliance is cool before using any type of aerosol cleaner on or around the appliance. The chemical that produces the spraying action could, in the presence of heat, ignite or cause metal parts to corrode.
- Clean parts only as listed in the user manual.
- Do not clean the oven door gaskets. The door gaskets are essential for a good seal of the oven. Care is to be taken during cleaning to prevent rubbing, damaging, or moving the gasket from its installed position.

⚠ WARNING

To reduce the risk of fire, electric shock, serious injury, or death when using your appliance, follow basic safety precautions, including the following:

- Use proper pan size. This appliance is equipped with one or more surface units of different size. Select the utensils having flat bottoms in the recommended dimension range for safe operation. Proper relationship of utensil to burner will also improve efficiency.
- Never leave surface units unattended at high heat settings. Boilover causes smoking and greasy spillovers that may ignite.
- Utensil handles should be turned inward and not extend over adjacent surface units. To reduce the risk of burns, ignition of flammable materials, and spillage due to unintentional contact with the utensil, the handle of a utensil should be positioned so that it is turned inward and does not extend over adjacent surface units.
- If the surface is cracked, switch off the appliance to avoid the possibility of electric shock. Do not cook on a broken cooktop. If cooktop should break, cleaning solutions and spillovers may penetrate the broken cooktop and create a risk of electric shock. Contact a qualified technician immediately.
- Clean cooktop with caution. If a wet sponge or cloth is used to wipe spills on a hot cooking area, be careful to avoid steam burn. Some cleaners can produce noxious fumes if applied to a hot surface.
- Metallic objects such as knives, forks, spoons, and lids should not be placed on the cooktop surface, since they can get hot.
- DO NOT TOUCH SURFACE UNITS OR AREAS NEAR UNITS. Surface units may be hot even though they are dark in color. Areas near surface units may become hot enough to cause burns. During and after use, do not touch, or let clothing, potholders, or other flammable materials contact surface units or areas near unit units until they have had sufficient time to cool. Among these areas are the cooktop and areas facing the cooktop.
- To eliminate the risk of burns or fire by reaching over heated surface units, cabinet storage space located above the surface units should be avoided.
- For the users of cardiac pacemakers, the magnetic field of the induction cooktop may influence its operation. Consult your doctor or the manufacturer of the device for additional information.

Information sur la sécurité

Veuillez lire et respecter les messages de sécurité suivants pour vous assurer que votre appareil de cuisson est installé et utilisé de la manière la plus sûre possible.:

DANGER indique un danger qui entraînera des blessures graves ou la mort si les précautions ne sont pas respectées.

AVERTISSEMENT indique un danger qui peut entraîner des blessures graves ou la mort si les précautions ne sont pas respectées.

ATTENTION signale un danger pouvant entraîner des blessures mineures ou endommager le produit si les instructions ne sont pas suivies.

Cet appareil est conçu pour une installation et un fonctionnement faciles, cependant nous vous recommandons de lire toutes les sections de ce manuel avant l'installation et la première utilisation.

Exigences électriques et instructions de mise à la terre
L'installation et l'entretien doivent être effectués par un installateur qualifié, une agence de service ou une entreprise de services publics.

Important: L'installation doit être conforme aux codes locaux ou, en l'absence de codes locaux, au National Electrical Code NFPA70.

L'installation d'appareils conçus pour une installation dans une maison préfabriquée (mobile) doit être conforme à la norme de sécurité et de construction de maisons préfabriquées, titre 24 CFR, partie 3280, ou, lorsque cette norme ne s'applique pas, se référer à : ANSI/NCSBCS A225.1 ou avec codes locaux, le cas échéant.

L'installation d'appareils conçus pour les remorques de parc de loisirs doit être conforme aux codes nationaux et locaux ou, en l'absence de tels codes, à la norme pour les remorques de parc de loisirs ANSI A119.5.cette norme ne s’applique pas, faire référence à: ANSI / NCSBCS A225.1 ou avec des codes locaux, le cas échéant.

L’installation d’appareils conçus pour les remorques de parc de loisirs doit être conforme aux codes d’État et locaux ou, en l’absence de tels codes, à la norme pour les remorques de parc récréatif ANSI A119.5.

⚠ AVERTISSEMENT

Pour réduire les risques d'incendie, d'électrocution, de blessures graves ou de mort lors de l'utilisation de votre appareil, suivez les précautions de sécurité de base, notamment les suivantes:

- Lisez le manuel d'utilisation fourni avant d'utiliser cet appareil.
- Ce produit doit être utilisé uniquement pour les tâches de cuisson attendues d'un appareil électroménager. Ce produit n'est pas destiné à un usage commercial.
- Si votre produit s'avère endommagé à la réception, contactez immédiatement votre revendeur ou le constructeur. Ne pas installer ou utiliser un appareil endommagé ou dont le conduit est endommagé.
- N'installez, ne réparez ou ne remplacez aucune pièce de l'appareil vous-même, sauf si cela est spécifiquement recommandé dans la documentation qui l'accompagne. Tout autre service doit être effectué par un technicien de service qualifié.
- L'alimentation électrique de l'appareil doit être coupée au niveau du disjoncteur ou de la boîte à fusibles avant d'effectuer tout type d'entretien ou d'installation.
- Cet appareil doit être correctement installé et mis à la terre par un installateur qualifié conformément à ces instructions d'installation avant utilisation. L'installateur doit montrer au client l'emplacement du panneau de disjoncteurs ou de la boîte à fusibles afin qu'il sache où et comment couper l'alimentation électrique de l'appareil. BlueStar n'est pas responsable du service requis pour corriger une installation défectueuse. Le propriétaire est responsable de s'assurer que cet appareil est correctement installé.
- Pour éviter tout risque d'électrocution, n'installez pas cet appareil à l'extérieur ou à proximité de l'eau. Ne pas installer ou utiliser cet appareil s'il a été exposé à l'eau.
- Ne pas obstruer les zones ou les fentes de ventilation. L'appareil doit être installé de manière à garder la zone sous la porte dégagée pour permettre la libre circulation de l'air.
- Ne modifiez pas les commandes. N'ajustez ou ne modifiez aucune pièce de l'appareil à moins d'y être spécifiquement invité par ce manuel.

⚠ AVERTISSEMENT

Pour réduire les risques d'incendie, d'électrocution, de blessures graves ou de mort lors de l'utilisation de votre appareil, suivez les précautions de sécurité de base, notamment les suivantes:

- Fixez l'appareil à l'armoire en suivant les instructions des instructions d'installation pour éviter les blessures dues au basculement de l'appareil vers l'avant.
- Pour éviter tout dommage, n'utilisez pas les poignées du four comme points de levage ou pour déplacer l'appareil
- Ne grimpez pas et ne vous asseyez sur aucune partie de l'appareil.
- N'utilisez jamais la porte du four pour marcher, vous appuyer ou vous asseoir. Des dommages à l'appareil et/ou des blessures corporelles peuvent survenir.
- Gardez les matériaux d'emballage hors de portée des enfants. Les feuilles et les sacs en plastique peuvent provoquer une suffocation.
- Ne laissez pas les enfants ou les animaux domestiques seuls ou sans surveillance dans la zone autour de l'appareil. Ne laissez pas les enfants jouer avec les commandes, tirer sur la poignée ou toucher d'autres parties de l'appareil
- Attention : ne rangez pas d'objets intéressants pour les enfants au-dessus de l'appareil. Les enfants peuvent se brûler ou se blesser en grimpant sur l'appareil.
- Installez un détecteur de fumée près de la cuisine.
- Ne pas utiliser d'eau sur les feux de graisse. Étouffez les flammes avec un couvercle, une plaque à biscuits ou un plateau plat. Utilisez du bicarbonate de soude ou un extincteur à mousse pour éteindre la graisse enflammée. En cas d'incendie, gardez la porte du four fermée.
- Gardez les articles inflammables, tels que le papier, le carton, le plastique et les tissus, à l'écart des surfaces chaudes. Ne mettez pas de tels articles dans le four. Ne laissez pas les maniques toucher les surfaces chaudes.
- Utilisez uniquement des maniques sèches pour éviter les brûlures de vapeur lorsque vous déplacez des articles dans ou hors de l'appareil. N'utilisez pas de serviette ou d'autre chiffon volumineux à la place des maniques.
- Lorsque vous utilisez le four, ne touchez pas les éléments chauffants ou les surfaces intérieures du four ou la zone extérieure entourant immédiatement la porte. Les éléments chauffants peuvent être chauds même s'ils sont de couleur foncée. Les surfaces intérieures du four peuvent devenir suffisamment chaudes pour causer des brûlures.
- Portez une tenue correcte. Ne portez pas de vêtements amples ou suspendus lors de l'utilisation de l'appareil. Ne laissez pas les vêtements entrer en contact avec ou à proximité de tout élément ou de l'intérieur du four et des zones environnantes pendant et immédiatement après l'utilisation. Certains matériaux synthétiques sont hautement inflammables et ne doivent pas être portés pendant la cuisson.
- N'utilisez pas le four pour le stockage.
- Ne stockez pas de matériaux combustibles, inflammables ou explosifs dans le four ou dans des armoires adjacentes.
- N'utilisez jamais l'appareil pour réchauffer ou chauffer la pièce.
- Ne recouvrez pas le four de papier d'aluminium ou d'autres matériaux pendant la cuisson ou le nettoyage.
- Ne laissez pas d'objets métalliques, tels que du papier d'aluminium, la sonde à viande, des plaques à biscuits, etc. sur le fond du four. Les objets laissés au fond du four pourraient endommager le four et l'objet.
- Soyez prudent lorsque vous ouvrez la porte du four. Laissez l'air chaud ou la vapeur s'échapper avant de retirer ou de replacer les aliments dans le four.
- Soyez prudent lorsque vous ajoutez des liquides à des aliments ou des récipients dans un four chaud. La vapeur peut causer de graves brûlures ou échaudures.
- Ne chauffez pas les récipients alimentaires non ouverts. L'accumulation de pression peut faire éclater le récipient et entraîner des blessures.
- La graisse est inflammable. Laissez refroidir la graisse chaude avant d'essayer de la manipuler. Évitez de laisser les dépôts de graisse s'accumuler. Nettoyer après chaque utilisation.
- Les lentilles d'éclairage doivent toujours être en place lorsque le four est utilisé pour protéger les ampoules contre la casse.

⚠ AVERTISSEMENT

Pour réduire les risques d'incendie, d'électrocution, de blessures graves ou de mort lors de l'utilisation de votre appareil, suivez les précautions de sécurité de base, notamment les suivantes:

- Les grilles du four doivent être positionnées lorsque le four est froid pour éviter les brûlures. Si une grille doit être déplacée alors que le four est chaud, ne laissez pas la manique entrer en contact avec les éléments chauffants chauds du four.
- Assurez-vous que toutes les commandes de l'appareil sont éteintes et que l'appareil est froid avant d'utiliser tout type de nettoyant en aérosol sur ou autour de l'appareil. Le produit chimique qui produit l'action de pulvérisation pourrait, en présence de chaleur, s'enflammer ou provoquer la corrosion des pièces métalliques.
- Nettoyez les pièces uniquement comme indiqué dans le manuel d'utilisation.
- Ne nettoyez pas les joints de la porte du four. Les joints de porte sont indispensables pour une bonne étanchéité du four. Des précautions doivent être prises lors du nettoyage pour éviter de frotter, d'endommager ou de déplacer le joint de sa position d'installation.
- Utiliser une casserole de taille appropriée. Cet appareil est équipé d'une ou plusieurs surfaces chauffantes de taille différente. Choisissez des ustensiles à fond plat dans la plage de dimensions recommandée pour un fonctionnement en toute sécurité. Un bon rapport dimensionnel entre l'ustensile et le brûleur améliorera également l'efficacité de l'appareil.
- Ne laissez jamais les surfaces chauffantes sans surveillance à des réglages de chaleur élevés - Le débordement provoque de la fumée et des déversements graisseux qui peuvent s'enflammer.
- Les poignées des ustensiles doivent être tournées vers l'intérieur et ne pas s'étendre sur les surfaces chauffantes adjacentes - Pour réduire le risque de brûlures, d'inflammation de matériaux inflammables et de déversement dû à un contact involontaire avec l'ustensile, la poignée d'un ustensile doit être positionnée de manière à ce qu'elle soit tournée vers l'intérieur et ne s'étend pas sur les surfaces chauffantes adjacentes.
- Si une surface est fissurée, éteindre l'appareil pour éviter tout risque de choc électrique. Ne cuisinez pas sur une table de cuisson cassée. Si la surface de cuisson se brise, les solutions de nettoyage et les déversements peuvent pénétrer dans la table de cuisson cassée et créer un risque de choc électrique. Contactez immédiatement un technicien qualifié.
- Nettoyez la table de cuisson avec prudence. Si une éponge ou un chiffon humide est utilisé pour essuyer les déversements sur une zone de cuisson chaude, veillez à éviter les brûlures de vapeur. Certains nettoyants peuvent produire des vapeurs nocives s'ils sont appliqués sur une surface chaude.
- Les objets métalliques tels que les couteaux, les fourchettes, les cuillères et les couvercles ne doivent pas être placés sur la surface de cuisson, car ils peuvent devenir chauds.
- NE PAS TOUCHER LES SURFACES CHAUFFANTES OU LES ZONES A PROXIMITE DES SURFACES. Les éléments de surface peuvent être chauds, même s'ils sont de couleur sombre. Les zones à proximité des éléments peuvent devenir suffisamment chaudes pour causer des brulures. Pendant et après l'utilisation, ne touchez pas et ne laissez pas les vêtements, les maniques ou autres matériaux inflammables entrer en contact avec les surfaces chauffantes ou les zones proches des éléments avant d'avoir suffisamment de temps pour refroidir. Parmi ces zones se trouvent la table de cuisson et les zones faisant face à la table de cuisson.
- Afin d'éviter tout risque de brulure ou d'incendie en passant au-dessus des surfaces chauffantes chaudes, il convient d'éviter les armoires de rangement situées au-dessus des surfaces chauffantes.
- Pour les utilisateurs de stimulateurs cardiaques, le champ magnétique de la table de cuisson à induction peut influencer son fonctionnement. Consultez votre médecin ou le fabricant de l'appareil pour plus d'informations.

Electrical Requirements

This appliance requires a grounded dedicated circuit with the following requirements:

- BSPIR486Z – 240/208 VAC, 60Hz, 50 amp

Performance may be compromised if the electrical supply is less than 240 volts.

For US models, the power cord is not included with the range. It is a four wire connection (4x10 AWG) and must be purchased separately. Use copper supply conductors only.

For Canadian models, the power cord is included.

FCC Statement

This induction cooktop generates and uses ISM frequency energy that heats cookware by using an electromagnetic field. It has been tested and complies with Part 18 of the FCC Rules for ISM equipment. This induction cooktop meets the FCC requirements to minimize interference with other devices in residential installation.

This induction cooktop may cause interference with television or radio reception. If interference occurs, the user should try to correct the interference by:

- Relocating the receiving antenna of the radio or television.
- Increasing the distance between the cooktop and the receiver.
- Connecting the receiver into a different outlet.
- It is the user's responsibility to correct any interference.

Site Preparation – Front View Product Dimensions (BSPIR486Z)

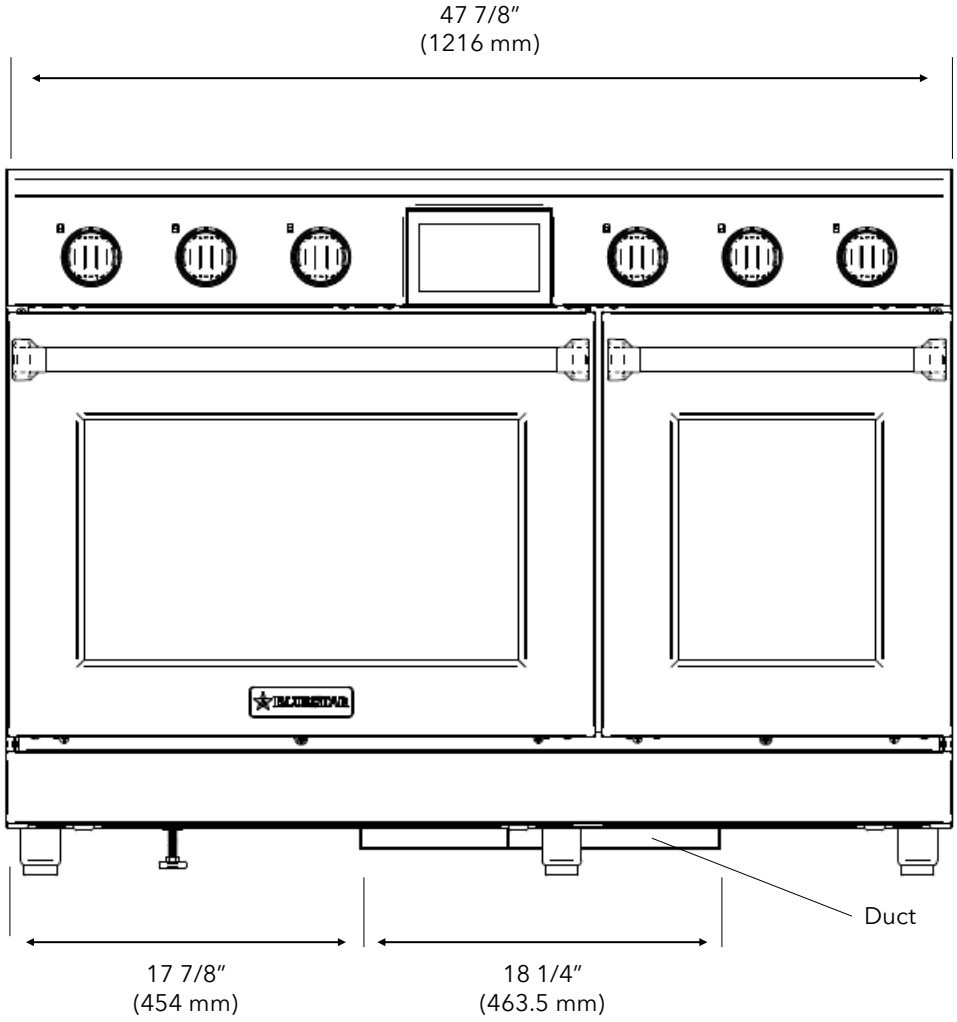

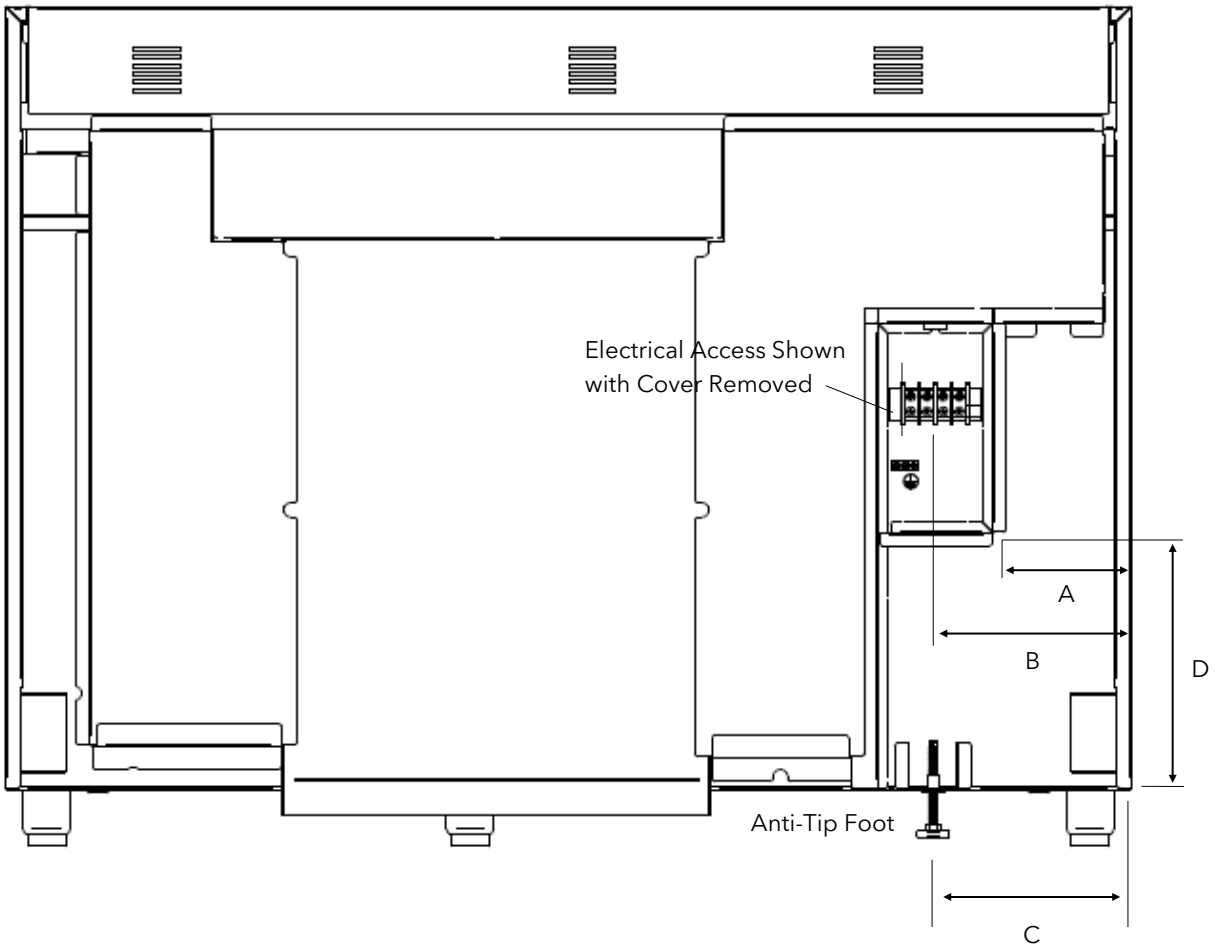

Model	A	B	C	D
BSPIR486Z	3 5/16″ (84.1 mm)	8 3/8″ (212.7 mm)	8 7/16″ (214.3 mm)	13 5/8″ (346.1 mm)

Site Preparation – Side View Product Dimensions

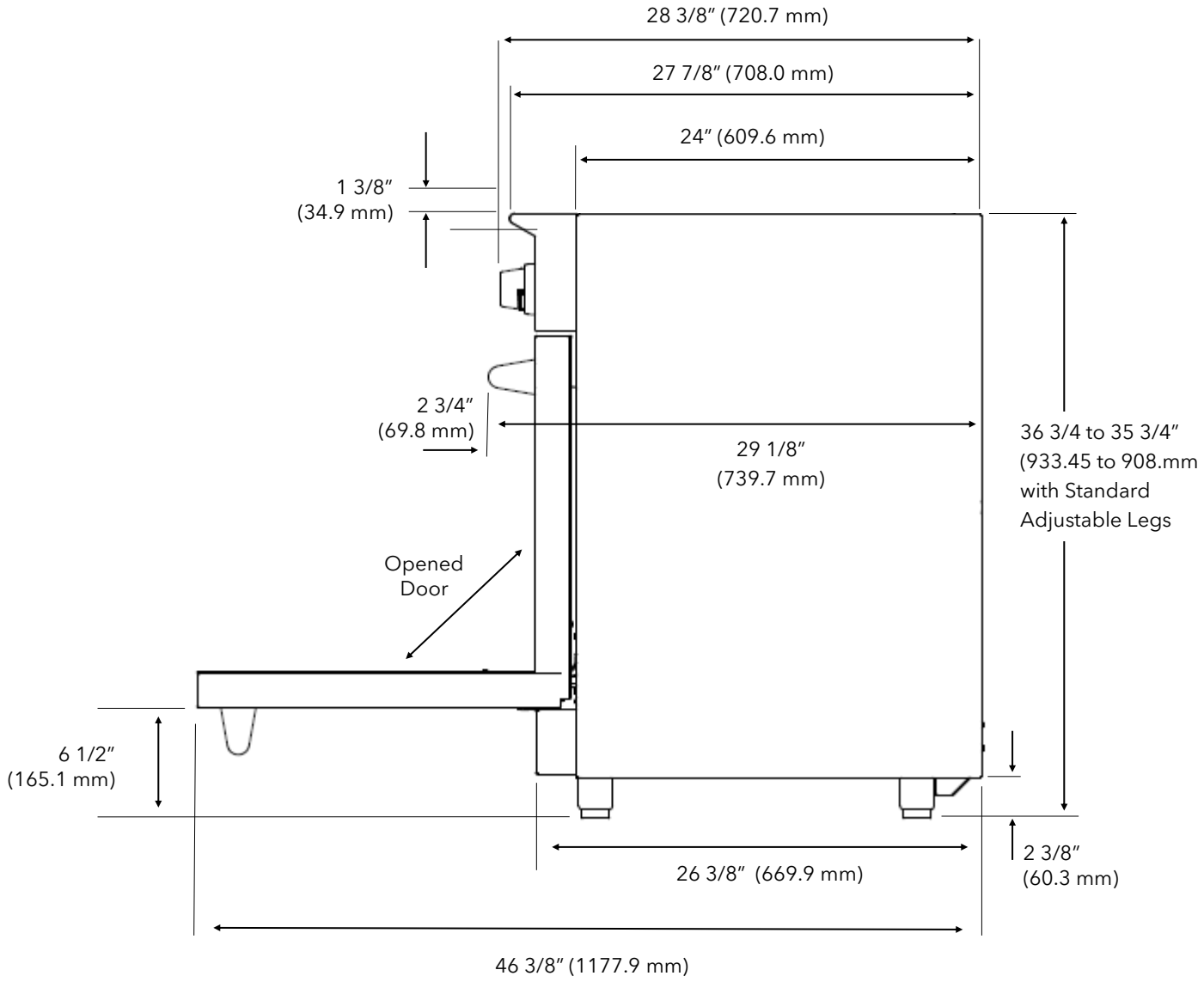

Front View

Ventilation recommended for all installations at 30”-36” (762.0-914.4 mm) above cooktop surface

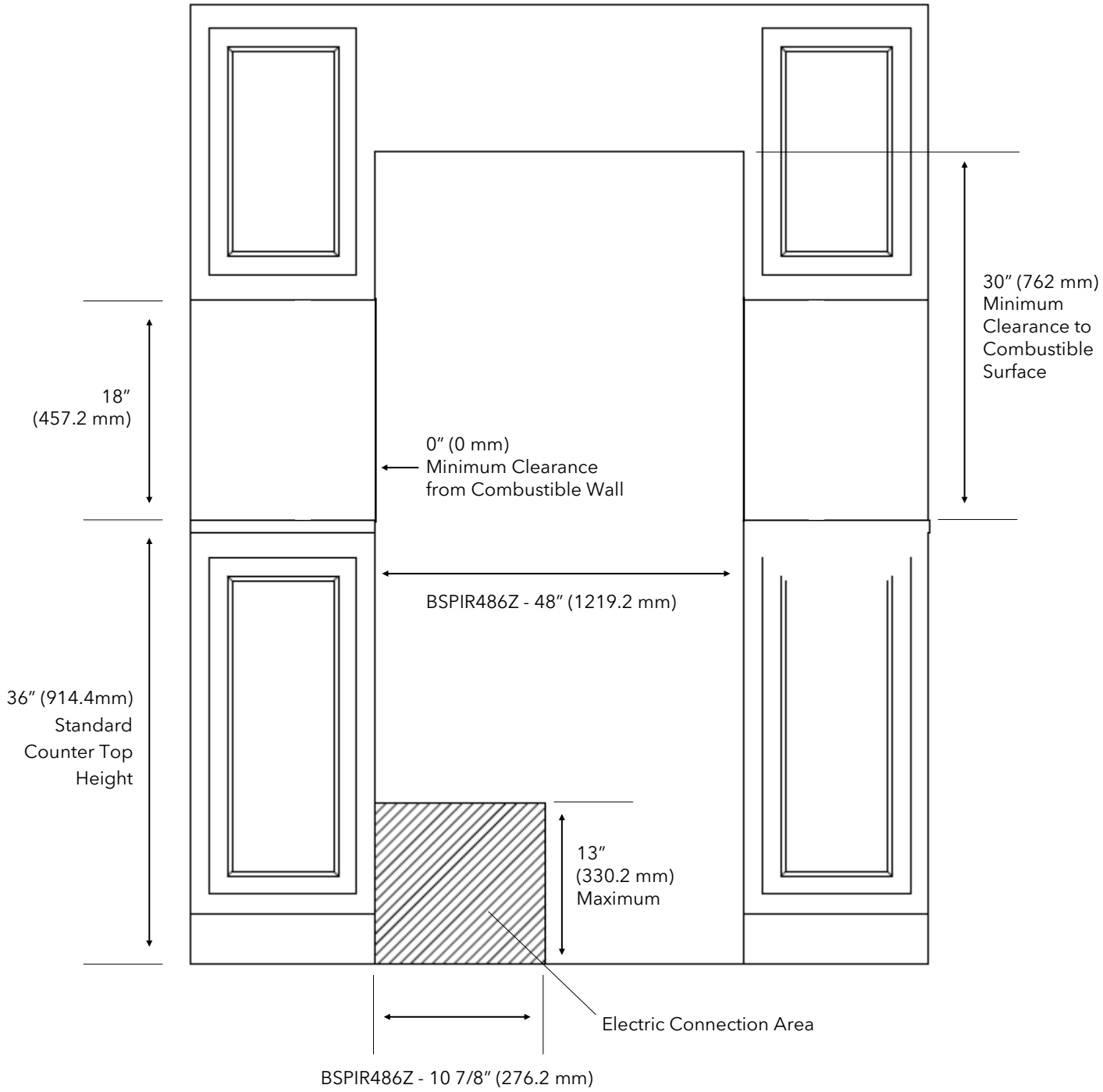

Side View

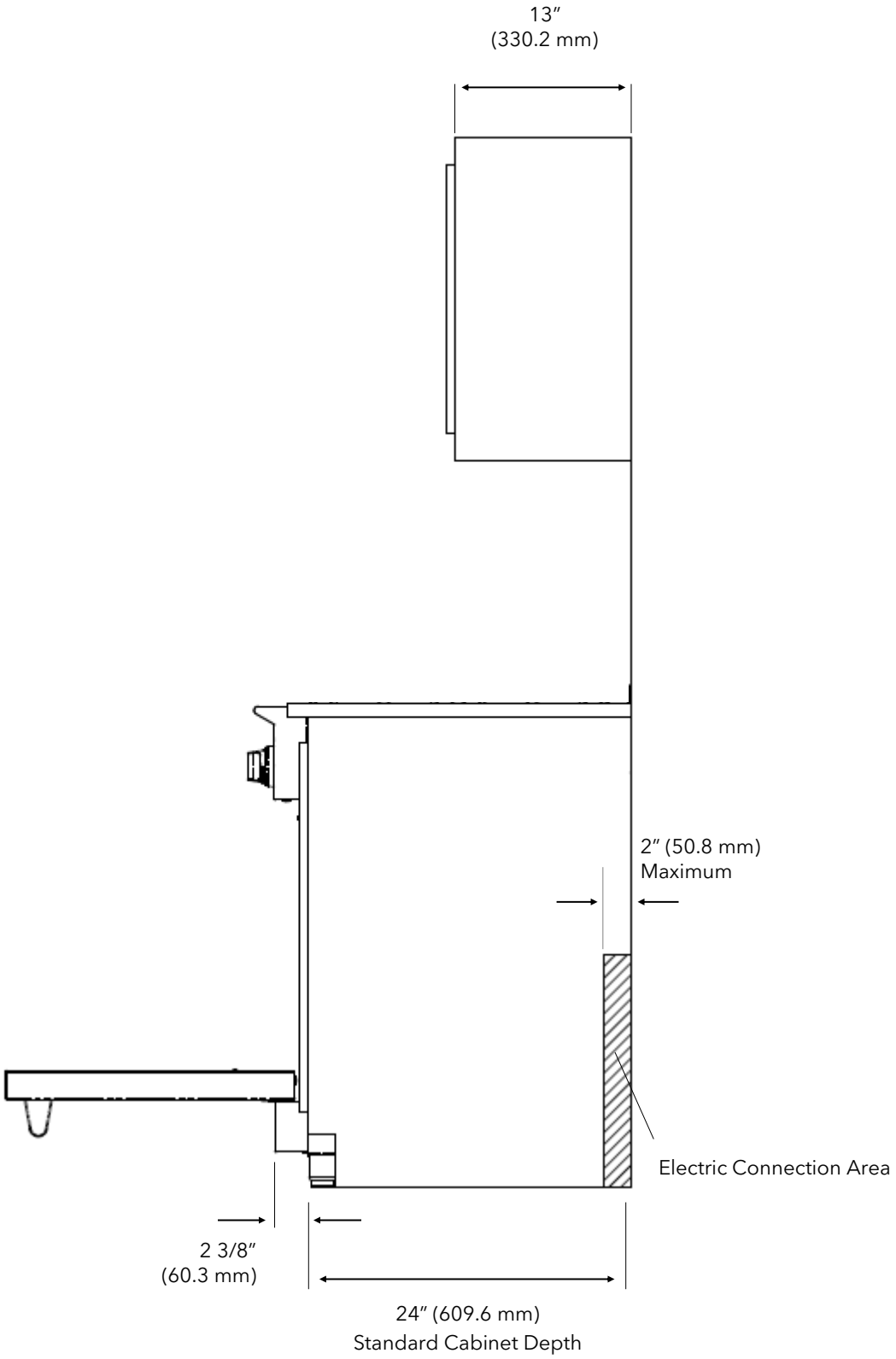
13″
(330.2 mm)
2″ (50.8 mm)
Maximum
Electric Connection Area
2 3/8″
(60.3 mm)
24″ (609.6 mm)
Standard Cabinet Depth

Tools and Materials

- 1/2″ socket wrench or open-end wrench
- Level
- Gloves and safety glasses

⚠ WARNING

This appliance is heavy and tips easily when not completely installed. Use two or more people to move and install the range. Failure to follow these instructions can result in death or serious injury.

⚠ AVERTISSEMENT

Cet appareil est lourd et bascule facilement lorsqu'il n'est pas complètement installé. Utilisez deux personnes ou plus pour déplacer et installer la cuisinière. Le non-respect de ces instructions peut entraîner la mort ou des blessures graves.

Step 1 – Uncrate and Inspect the Range

Uncrate and inspect the range. Remove the packing materials but do not discard the anti-tip bracket, temperature probe, user manual, etc.

Step 2 – Install the Anti-Tip Bracket

Important: An anti-tip bracket is required for all ranges. You must install the anti-tip bracket before installing the range to reduce the risk of tipping.

Attach the anti-tip bracket using the measurements below.

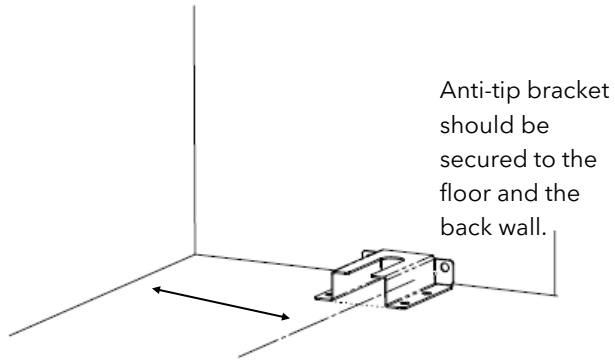

Step 3 – Detach the Door

1. Open the door all the way.
2. Holding onto the door, push the latch at the top of each hinge downwards to lock the hinge.

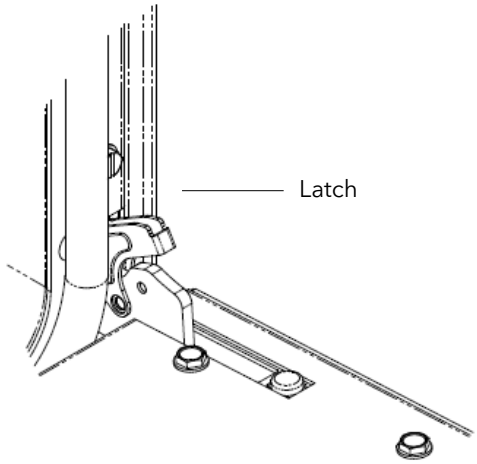

3. After the hinges are locked, lift the door slightly, then pull the hinge arms out of the hinge receptacles to remove the door.

⚠ CAUTION

Keep fingers away from the door hinges after removing the door. The hinges have strong springs that can snap closed if impacted, which can cause injury.

⚠ MISE EN GARDE

Éloignez les doigts des charnières de la porte après avoir retiré la porte. Les charnières ont des ressorts solides qui peuvent se refermer en cas de choc, ce qui peut causer des blessures.

4. Lean the door against a wall or cabinet with the handle towards the floor and facing the wall to prevent the hinge latches from coming unlatched. Use padding beneath the door to prevent scratching or damage

Step 4 – Remove the Oven Racks

See page 31 for instructions.

Step 5 – Move the Range into Position

Remove the wood base with a 1/2" socket or open end wrench and discard the shipping bolts and brackets. Use an appliance cart to move the range near the front of the enclosure. Do not slide it into the cabinet until after connecting the electrical connections.

Step 6 – Connect Electrical Supply

Observe all local and other codes regarding electrical connections.

⚠ WARNING

This appliance must be grounded. Do not cut, remove, or disregard the grounding wire in this appliance. If the appliance is not grounded, severe shock hazards can exist.

⚠ AVERTISSEMENT

Cet appareil doit être mis à la terre. Ne coupez pas, ne retirez pas et ne négligez pas le fil de mise à la terre de cet appareil. Si l'appareil n'est pas mis à la terre, de graves risques d'électrocution peuvent exister.

Installation and service must be performed by a qualified installer, service agency, or utility company.

Installation must comply with all applicable electrical codes.

1. Remove the electrical box cover to expose the terminal block. Route the wires through a strain relief (not supplied) through the bottom of the electric enclosure. The terminal block allows for a 4-wire installation.
2. If a four wire connection is used remove and discard the metal ground strap.
3. Connect green/ground to G.
4. Connect white/neutral to N.
5. Connect red to L1.
6. Connect black to L2.

Important: All electrical wiring should be free and clear. Wires or cables should not be pinched or otherwise obstructed.

7. Tighten the screws on the strain relief and attach the electrical cover.

If a power-supply cord kit is used (not included), it shall be rated 240V, 50 amps. It must include 3 or 4 conductors with closed loop terminals and be marked for use with ranges with nominal 1-3/8" (35mm) diameter connection openings. A 4-conductor cord is required for installations where grounding through the neutral is prohibited, such as:

a. New branch-circuit installations (1996 NEC),

b. Mobile homes,

c. Recreational vehicles, or

d. In an area where local codes prohibit grounding through the neutral.

Performance may be compromised if the electrical supply is less than 240 volts.

Power supply: grounded, 240VAC, 60Hz

Circuit protection: 50 amp dedicated circuit

IMPORTANT: Save these instructions for the local electrical inspector's use.

Three-Wire Installation

Move the metal ground strap to positions N and G as shown below.

a. Connect the white/neutral to G.

b. Connect black to L1.

c. Connect red to L2.

d. Tighten the screws on the strain relief and attach the electric box cover.

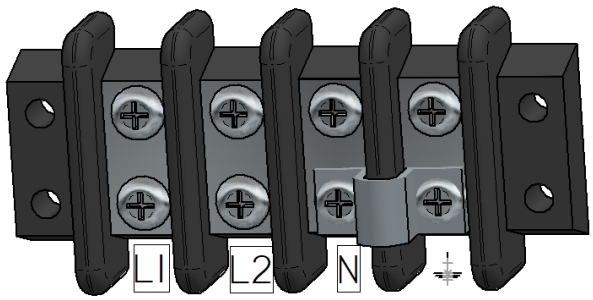

Step 7 – Slide the Range into Position

1. Slide the range into place so the anti-tip foot slides into the bracket.
2. Level the range, placing the level on the surface three ways: side to side, front to back, and diagonally.

Important: If you move the range, remove the anti-tip bracket before the move, then reinstall it in the new location. Do not operate the range without the anti-tip bracket engaged.

Step 8 – Replace the Oven Racks

See page 31 for instructions.

Step 9 – Reattach the Door

1. Hold the door with the handle side facing the ground.
2. Align and insert the door hinges with the openings on the range.
3. Push up the latch at the top of each hinge to secure each hinge.
4. The door should close easily.

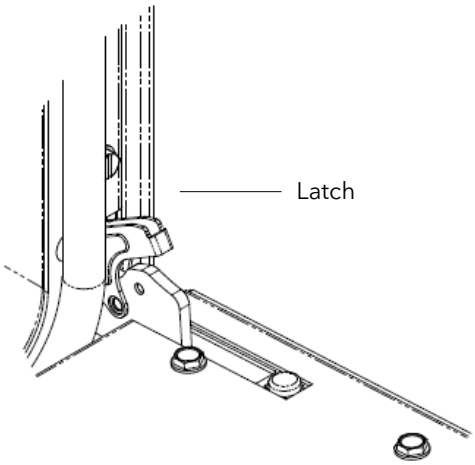

Product Description – BSPIR486Z

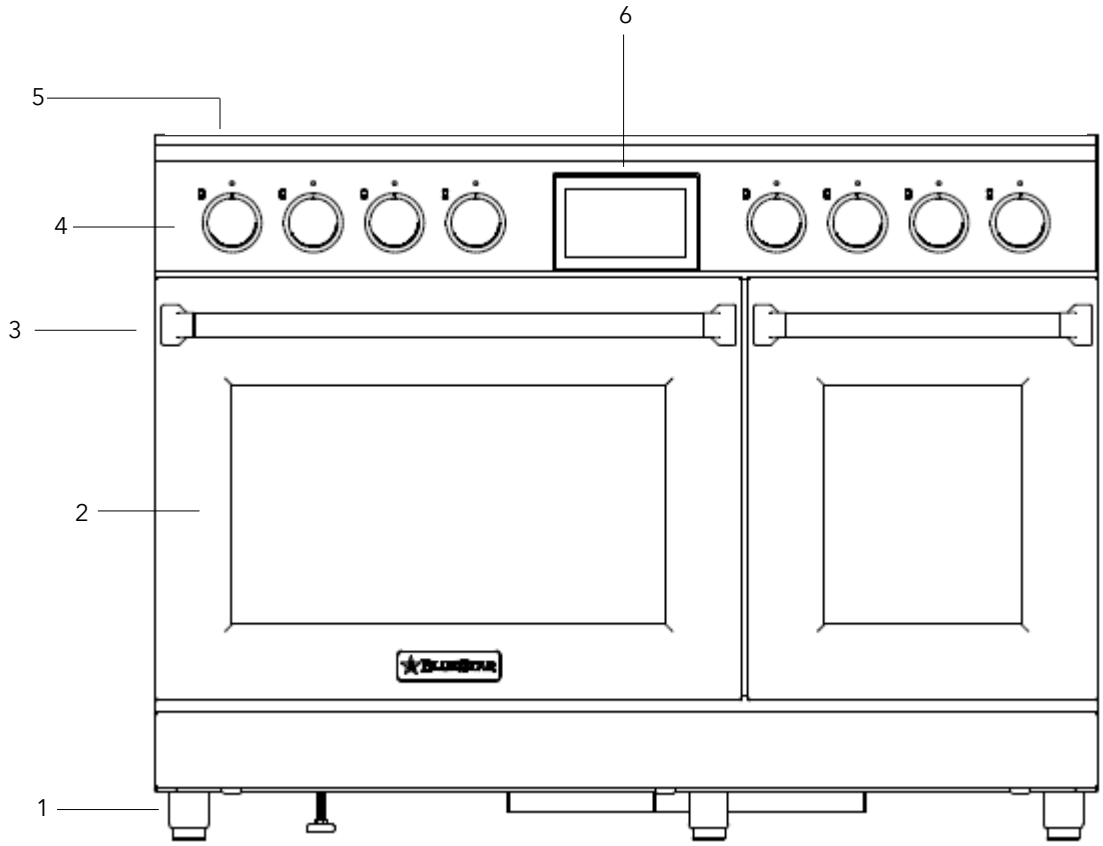

1 Legs
2 Doors
3 Handles
4 Control Knobs
5 Cooking Surface
6 Touch Screen Control
7 Oven Lights
8 Rack Guide (both sides)
9 Oven Racks
10 Temperature Probe

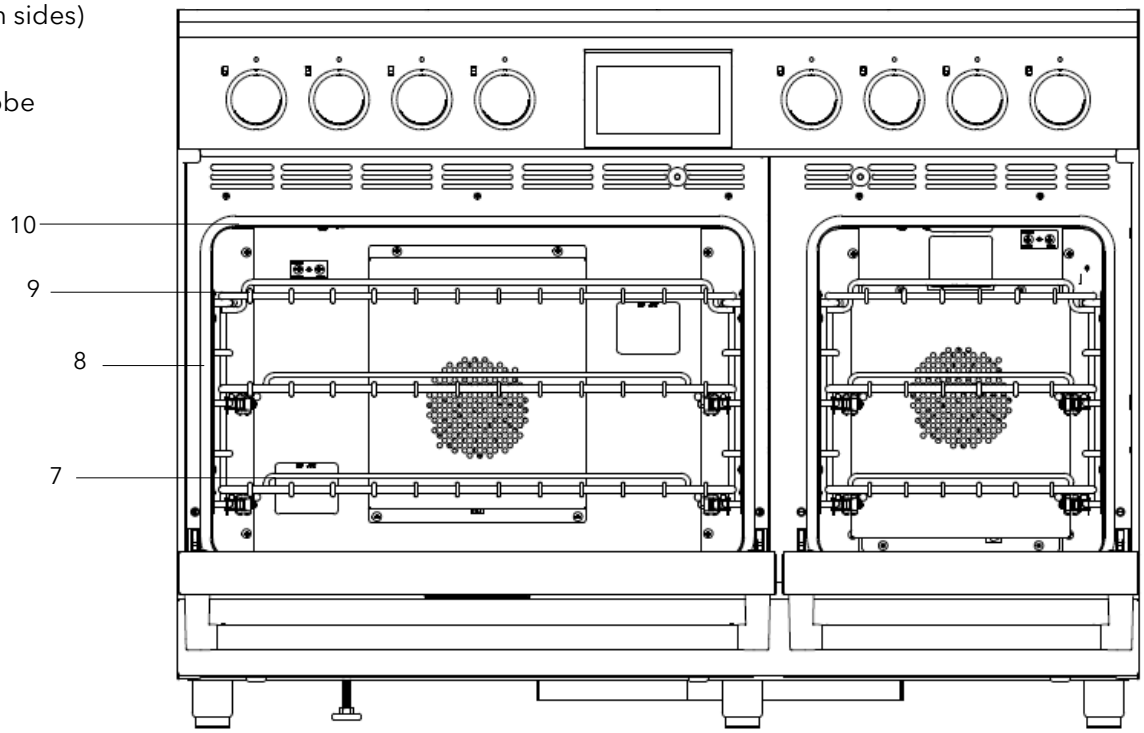

Product Description – BSPIR486Z (continued)

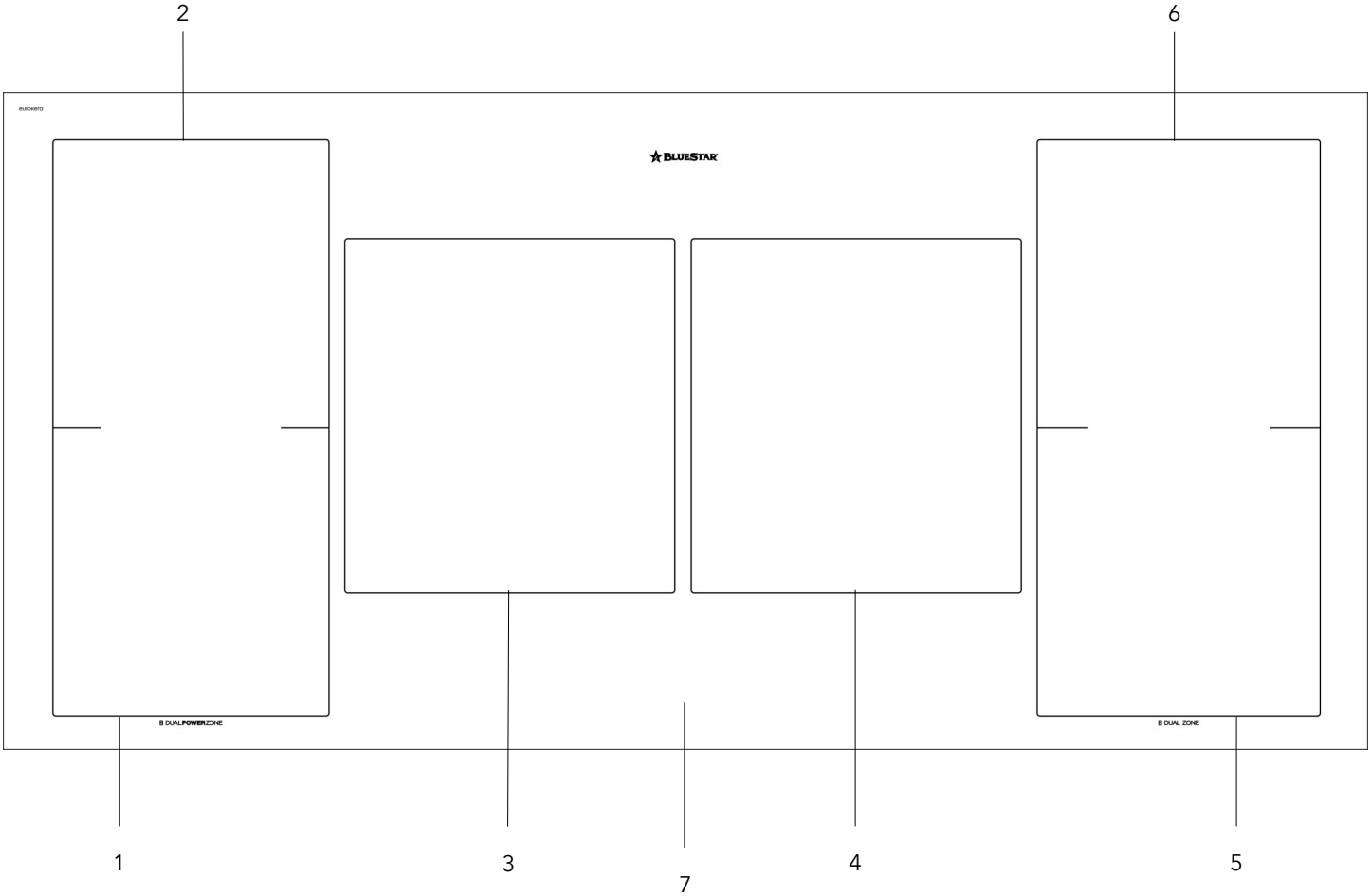

1 Front Left Cooking Zone
Size: 9″ x 9″ (230 x 230 mm) | Recommended Minimum Cookware Size: 4-1/2″ (110 mm)
Nominal Power*: 2,100 W | Power Boost*: 3,700 W

2 Rear Left Cooking Zone
Size: 9″ x 9″ (230 x 230 mm) | Recommended Minimum Cookware Size: 4-1/2″ (110 mm)
Nominal Power*: 2,100 W | Power Boost*: 3,700 W

3 Middle Left Cooking Zone
Size: 11″ x 11″ (280 x 280 mm) | Recommended Minimum Cookware Size: 4-1/2″ (110 mm)
Nominal Power*: 2,300 W | Power Boost*: 3,700 W

4 Middle Right Cooking Zone
Size: 11″ x 11″ (280 x 280 mm) | Recommended Minimum Cookware Size: 4-1/2″ (110 mm)
Nominal Power*: 2,300 W | Power Boost*: 3,700 W

5 Front Right Cooking Zone
Size: 9″ x 9″ (230 x 230 mm) | Recommended Minimum Cookware Size: 4-1/2″ (110 mm)
Nominal Power*: 2,300 W | Power Boost*: 3,700 W

6 Rear Right Cooking Zone
Size: 9″ x 9″ (230 x 230 mm) | Recommended Minimum Cookware Size: 4-1/2″ (110 mm)
Nominal Power*: 2,300 W | Power Boost*: 3,700 W

7 Display area

* The given power may change according to the dimensions and material of the cookware

Oven Burn-Off Procedure

Important: Before you use the range, it is essential that you complete the oven burn-off procedure. This procedure will take 90 minutes to complete and will remove all factory oils and residue from its internal parts. During this process, you may notice a strong odor, some smoke, and/or condensation on the front of the oven (including the oven doors, control panel, and side panels) as any oils and solvents on internal parts are burned off. This is normal and is the primary reason for this burn-off. Failure to complete this procedure before first using the oven may result in undesirable odors, flavors, and excessive smoke,

Note: For documentation purposes, touch screen control illustrations are for the BSPIR48 range. Instructions apply to all ranges unless otherwise noted.

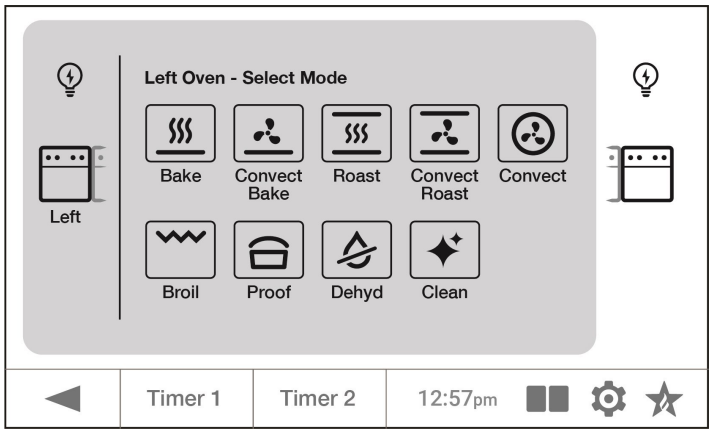

1. Take out the oven racks, and temperature probe (if necessary).
2. Tap **Clean** on the Select Mode screen.
3. Tap **Start** on the Select Clean screen to start the cleaning cycle, which will take 90 minutes.
4. The Cleaning in Progress timer will start counting down from “1:30”. You can tap **OFF** at any time to stop the process.
5. When the time is up, you will hear a tone to indicate the Clean cycle is complete. The oven will still be hot at this point.
6. Wait for the oven to cool completely before you put back the oven racks.

Cooktop

1. Clean your cooktop with a damp cloth and then dry the surface thoroughly. Do not use detergent, this can create a blue-tinted color on the glass surface.
2. Remove all labels and self-adhesives from the ceramic glass.

Important: the quality of your cookware can affect cooking performance.

Cookware compatibility:

- Only use induction compatible cookware that has been specifically designed for induction cooking. Look for the induction symbol on the packaging or the bottom of the pan.

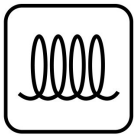

- A suitable cookware is made of ferromagnetic material. You can check this with a magnet – if the magnet sticks to the cookware bottom, it is likely to be induction compatible.
- The suitable cookware materials are: stainless with a magnetic base, cast iron, steel, enameled steel.
- The unsuitable cookware materials are: pure stainless steel, copper, aluminum, glass, wood, porcelain, ceramic or earthenware.
- The induction cooking zone automatically recognizes the size of the cookware. If its size is too small, it won't work. The minimum cookware size varies with the cooking zone sizes.
- If the cookware isn't adapted to the induction, the display will show the following symbol:

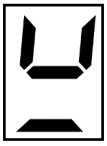

- To ensure the best efficiency, always use cookware with a flat bottom.
- Performance may vary based on the cookware used. It is recommended that smaller cookware, especially anything 4" in diameter or smaller, is placed on the left cooking zones.

Noise:

- Certain cookware can make noise when placed on an induction cooking zone. Some cookware are noisier than others. When used at maximum power, the cookware will hum, similar to a transformer. This noise is normal and does not mean that there is something wrong with the appliance, nor does it influence its function.

Cooling fan:

- The cooling system is fully automatic. The cooling fan starts at a low speed when the heat generated by the electronic system reaches a certain level. The cooling fan increases to high-speed when the cooktop is intensively used. The cooling fan reduces its speed and stops automatically when the electronic circuit has cooled down enough.

Touch Screen Control

Note: For documentation purposes, touch screen control illustrations are for the BSPIR48 range. Instructions apply to all ranges unless otherwise noted.

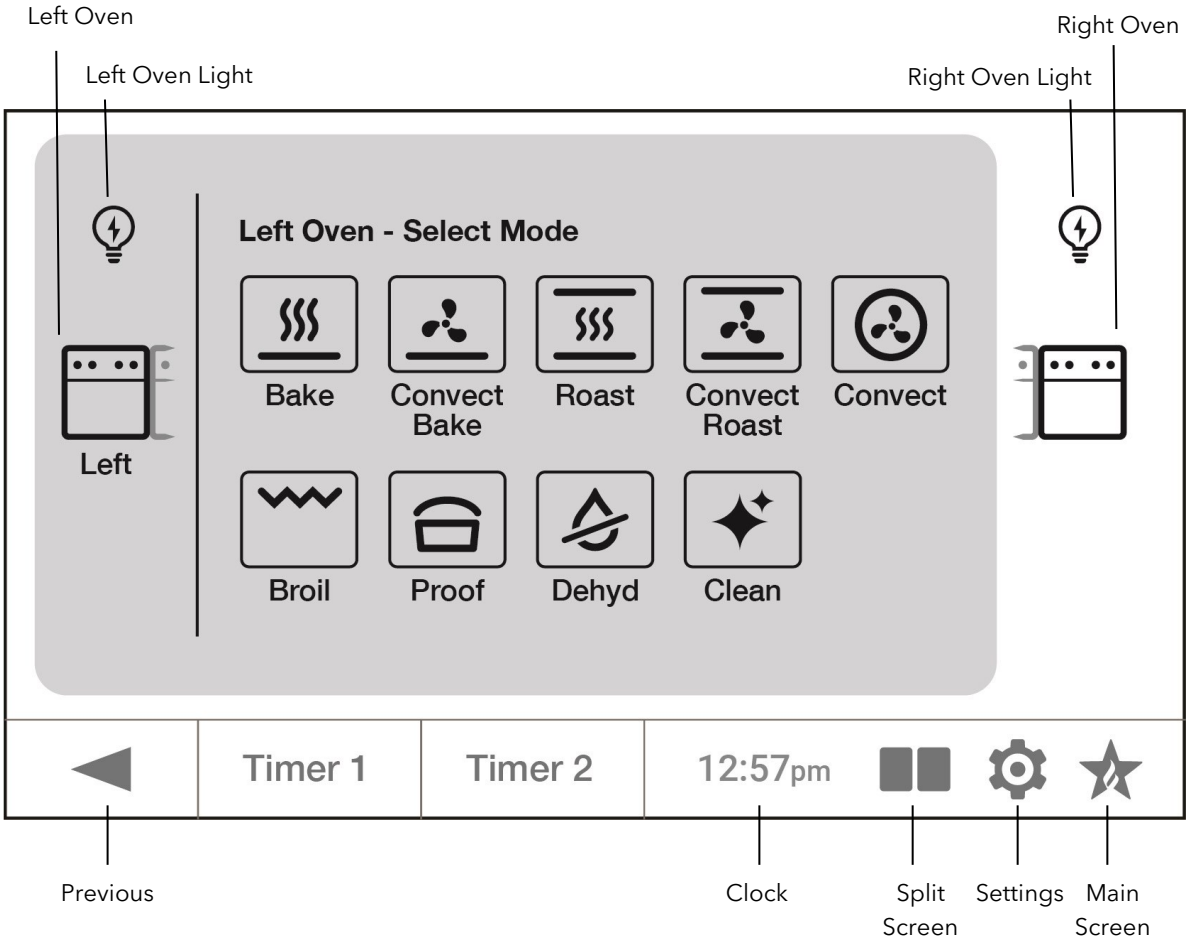

Main Screen

When you are not using the ovens, the main screen shows the time.

Tap the screen to start any oven operation. Tap the BlueStar logo in the bottom right corner to return to the main screen.

Note: Any time the touch screen control is in use, the cooling fan will automatically start.

Settings

Tap the **Settings** icon to do any of the following:

- Set the time
- Change the temperature scale (Fahrenheit/Celsius)
- Enable Sabbath mode
- Lock the touch control screen
- Adjust the volume
- Change the clock design

Split Screen

Note: The following information applies to the BSPIR48 range only.

By default, the system starts with the left oven. Tap the right oven icon on the right to use the right oven instead.

After tapping **Start** on any operation, you can tap the oven icon on the opposite side (in the black) to set up the second oven for additional cooking.

To see both ovens on the touch screen control, tap the split screen icon in the bottom row.

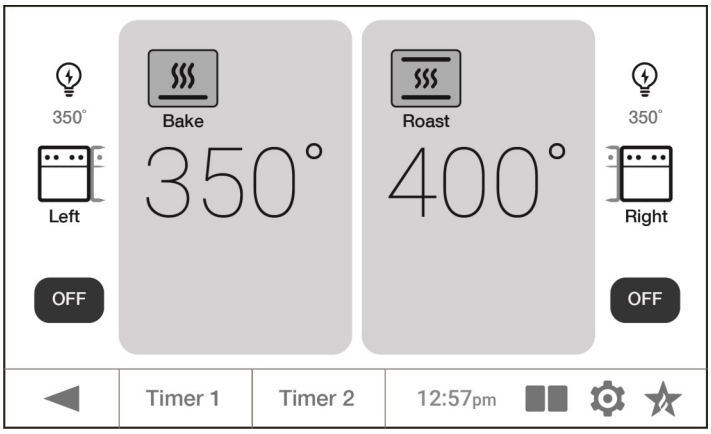

Kitchen Timers

1. Tap either **Timer 1** or **Timer 2** in the bottom row.
2. On the Set Kitchen Timer screen, use the keypad to enter the hours, minutes, and seconds, then tap **Start**. The timer countdown will appear in the bottom row in the Timer box.

3. When time is expired, you will hear a tone for two minutes or until you respond. Tap the Timer box.

Previous Screen

Tap the previous icon to go to a previous screen.

Oven Light

Tap the light bulb icon to turn on the oven light. Tap the same icon again to turn it off.

Important: Keeping the oven light on while cooking will increase the oven temperature approximately 15°F (-9°C).

Touch Screen Control–Modes

Your oven has the following operating modes:

BSPIR48

Left Oven

- Bake
- Convection Bake
- Roast
- Convection Roast
- Convection
- Broil
- Proof
- Dehydrate

Right Oven

- Bake
- Convection Bake
- Convection
- Proof
- Dehydrate
- Clean

Note: For documentation purposes, touch screen control illustrations are for the BSPIR48 range. Instructions apply to all ranges unless otherwise noted.

1. Tap the mode on the Select Mode screen.

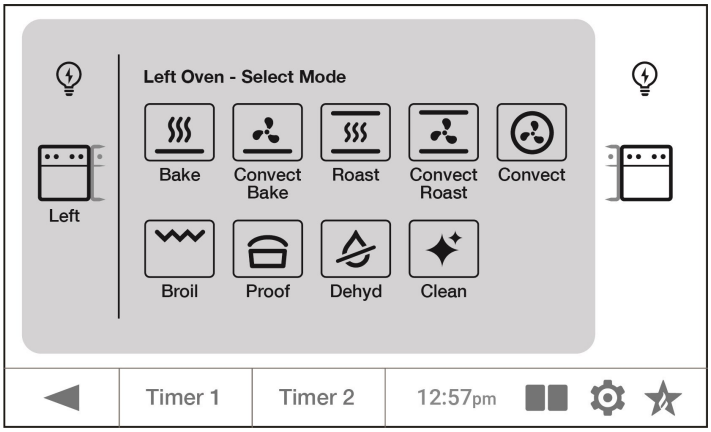

2. Use the default setting or use the keypad to enter the temperature on the Select Temperature screen. Tap **Start** to preheat the oven. You also have the option to turn preheat on or off.

Note: If you want to select an option, do so before you tap **Start.**

3. Tap **Options** to select any of the following. Once you have made your selections, tap **Start** to confirm the setting and begin cooking:
   - Select **Timed** to set the cooking time.
   - If you want to postpone the bake start time, select **Delay**.
   - If you are using the temperature probe and need to set its temperature, select **Probe**.

Timed

Use the keypad on the Set Cook Time screen to set the cooking time in hours and minutes, then tap **Set**.

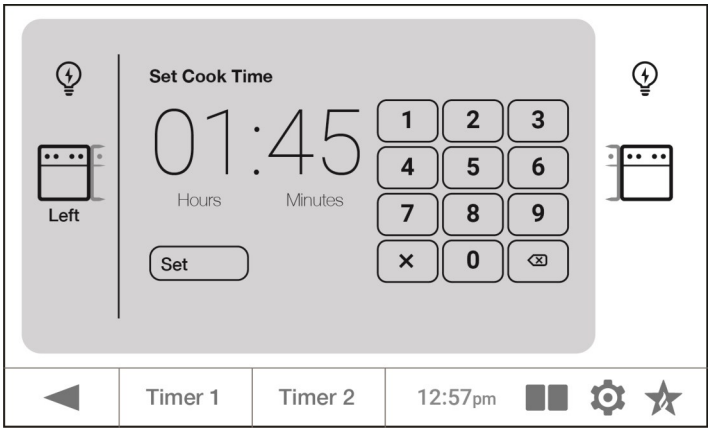

Delay

Note: Using Delay Time will turn off the preheat feature to prevent burning food.

Use the keypad on the Set Delay Start Time screen to set the hours/minutes, then tap **Set**.

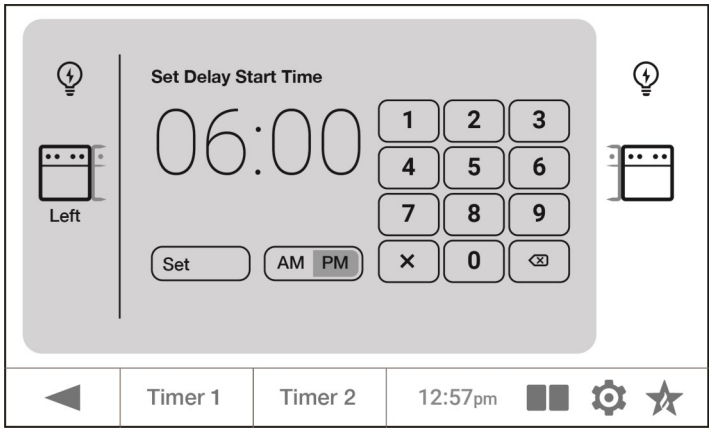

Probe

Note: The probe is not available with the Broil, Proof, or Dehydrate modes.

Use the keypad on the Set Probe Temp screen to set the temperature or use the options on the Select Meat screen and the corresponding Type or Preferences on the subsequent screens. Tap **Set**.

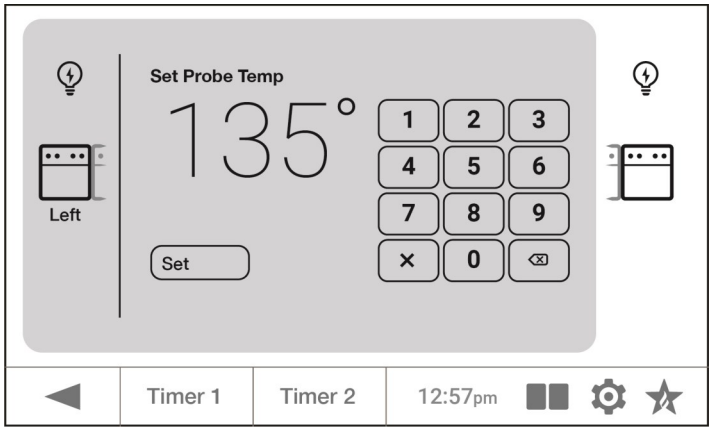

Clean

1. Tap **Clean** on the Select Mode screen
2. Tap **Start** on the Select Clean screen to start the cleaning cycle, which will take 90 minutes.
3. The Cleaning in Progress timer will start counting down from "1:30". You can tap **OFF** at any time to stop the process.
4. When the time is up, listen for a tone to indicate the Clean cycle is complete. The oven will still be hot at this point.

Demo Mode (for dealer use only)

1. Tap **Calibrate Left (or Calibration)** on the Settings screen.
2. On the Calibrate screen, press the blank space in the center at the top of the screen to go to the Set Demo Mode screen and follow the steps on the screen.
3. DEMO will appear in the center of each screen.
4. To cancel Demo mode, press and hold DEMO for five seconds to access the Set Demo Mode screen and follow the steps on the screen.

Tap the **Settings** icon.

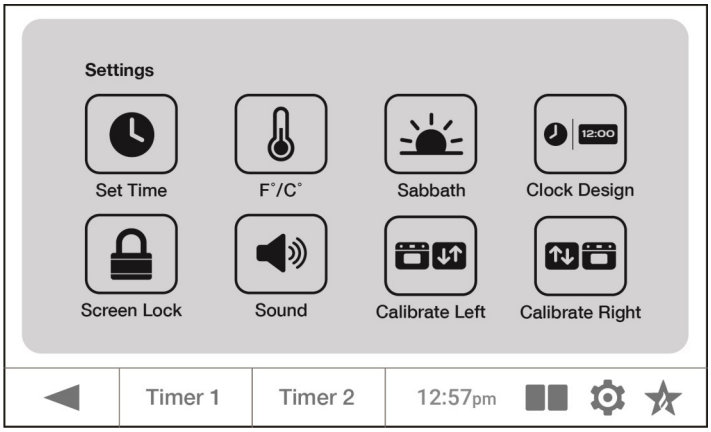

Set Time

1. Tap **Set Time**.
2. On the Enter Current Time screen, use the keypad to enter the hours and minutes, tap **12** or **24** for either a 12-hour or 24-hour clock. If you select "24" , the AM/PM option will be disabled. Tap **AM** or **PM**, then tap **Set** to confirm your selections.

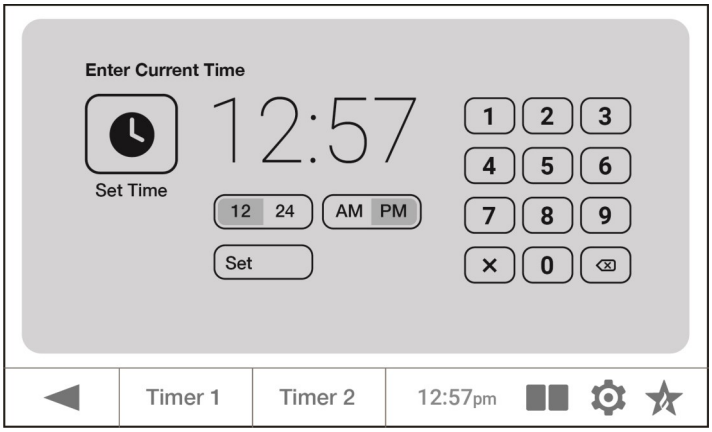

3. Tap the **Main Screen** icon to see the change made.

F°/C° (Temperature Scale)

1. Tap °**F/**°**C**.
2. Tap **°F** (Fahrenheit) or **°C** (Celsius).

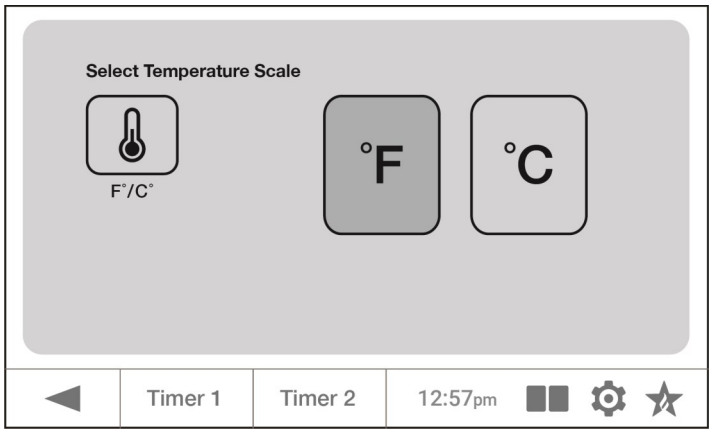

Sabbath

In Sabbath mode, the oven maintains a set cooking temperature in Bake, Convection Bake, Roast, Convection Roast, or Dehydrate mode until you cancel Sabbath mode. Oven lights and alarms (except error codes) are disabled until Sabbath mode is canceled.

When in Sabbath mode, you can tap either arrow to increase or decrease the temperature in 10-degree increments. You will have to wait at least a minute before you can change the temperature again. When you adjust the temperature, there will be no indication the oven temperature did change.

1. Tap **Sabbath** and follow the steps on the screen.

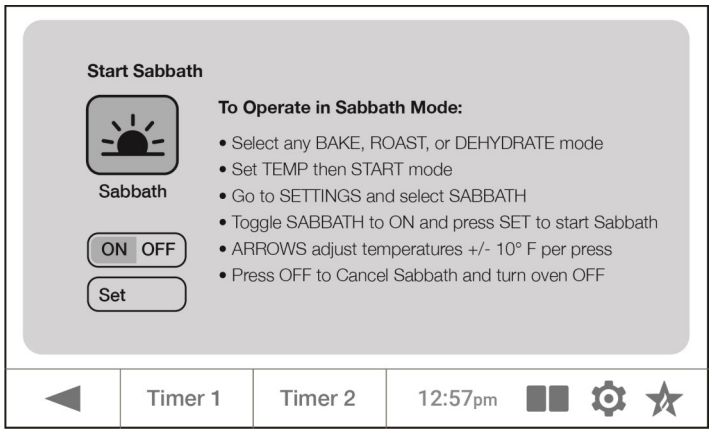

2. Tap **OFF** to cancel the Sabbath mode.

Clock Design

1. Tap **Clock Design**. If you do not want a clock design to show on the main screen, tap **OFF** and the screen will remain black.
2. Tap **Analog** or **Digital** to select the type of clock you want.
3. Tap any of the options available.
4. Tap any of the colors available.
5. Tap the **Clock Design** icon to see the change made.

Screen Lock

1. Tap **Screen Lock**.
2. Tap **ON** to lock the touch screen control. When the screen is unlocked, you can use the oven normally until the control returns to the main screen, where the screen will lock again. This will happen each time the control returns to the main screen until you turn off the screen lock.
3. Press and hold the **Screen Lock** for three seconds to unlock the screen.

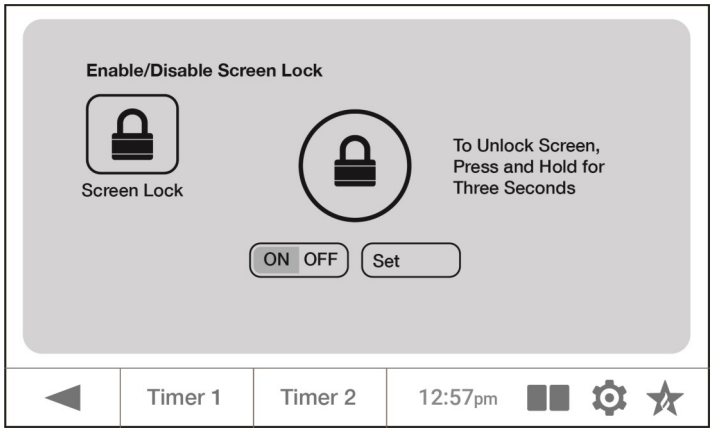

Sound

1. Tap **Sound**.
2. Tap any of the volume options to listen its the sound level.

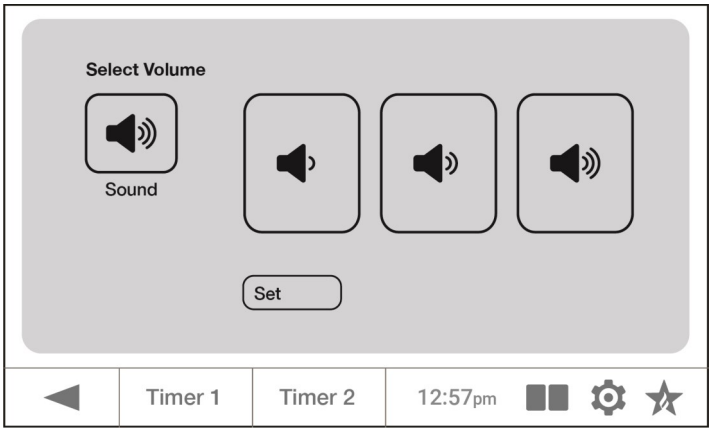

3. Tap **Set** after selecting the volume you want.

Calibrate

The oven is factory calibrated and if changes are necessary should be calibrated by an authorized BlueStar service company. To locate an authorized BlueStar service company in your area, go to www.bluestarcooking.com/support/find-a-service-center.

Cooktop Control

Display

Each knob controls a cooking zone and corresponds to a dedicated indicator in the display area.

BSPIR486Z

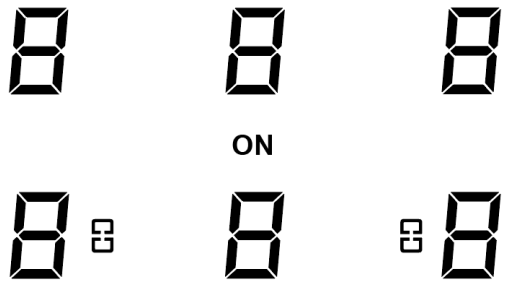

Display	Meaning
0 to 9	Power levels
U	No cookware detected
P	Power Boost function activated
A	Automatic heat-up function activated
U	Keep Warm 150°F (70°C) function activated
U	Simmer 200°F (94°C) function activated
8	Dual Zone activated
H	Hot surface indicator
L	Childlock function activated
E	Error message indicator

Dynamic Light Bar

All the cooking zones have a dynamic light bar in front of them. This additional indicator allows to quickly identify which cooking zone is corresponding to the used knob. It also allows to get a quick indication of the power level set without referring to the central display area.

The light bar is divided in 4 different segment lengths covering the range of power levels of the cooking zone.

1. First segment length for Keep Warm, Simmer, power level 1, 2 and 3.

2. Second segment length for power levels 4 and 5.

3. Third segment length for power levels 6 and 7.

4. Fourth segment length for power levels 8, 9 and Power Boost.

Cooktop Control–Functions

Start-up / switch-off a cooking zone

1. Place a cookware on the cooking zone. In case you try to start without cookware, the display will show U and the cooking zone won't heat-up.
2. Push and turn clockwise the knob corresponding to the desired cooking.

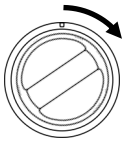

3. The corresponding display will turn on.
4. You can now adjust to the desired power level (from **1** to **9**).

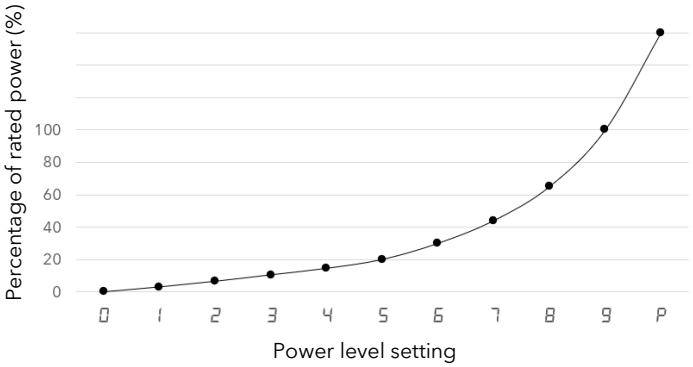

Note: if the cookware is removed from the cooking zone, the operation is stopped and the display shows U

After use, switch the cooking zone off by turning back the knob to 0

Do not leave the cooking zone on without any cookware.

Smart power optimization

The induction range has a maximum potential power. When the ovens are activated and/or high power levels are set on the cooktop, the electronic system automatically reduces the power level of individual cooking zones so that the cooking can continue on the highest power levels possible.

Power Boost

All the cooking zones feature the Power Boost function. This function provides a boost of power to the selected cooking zone. When activated, the cooking zone works at an extra high speed for a maximum of 10 minutes. This is meant to be used for heating large quantities of liquids very quickly (e.g. water for pasta).

1. Set the knob of the desired cooking zone to power level **9**.

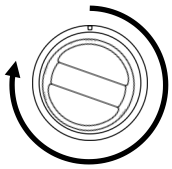

2. Rotate the knob to the **P** position and hold for 2 seconds until display shows P

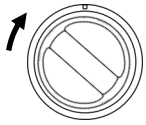

Keep Warm and Simmer

All the cooking zones feature the Keep Warm and Simmer functions. These functions allow the cooking zones to reach and automatically maintain a temperature of 150°F (70°C) or 200°F (94°C). This prevents liquids from overflowing and food from burning.

The u for Keep Warm at 150°F and U for Simmer at 200°F are intermediary positions of the knob between **0** and **1**.

1. Push and turn the knob slightly clockwise until u or U show on the display.

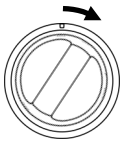

Automated heat-up

All the cooking zones feature the automated heat-up function. This function allows to rapidly heat-up food or liquid then automatically reduces the power level to a pre-selected power setting.

The amount of time the cooking zone will rapidly heat-up depends on the pre-selected power setting.

1. Push and turn the knob counter-clockwise until you reach the stop and hold for 2 seconds until A displays.

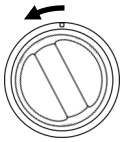

2. Rotate the knob clockwise and select the desired power level. The selected power level and A is blinking, showing the function is activated.

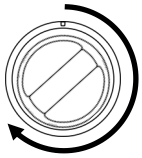

3. The automated heat-up is set. The cooking zone will rapidly heat-up the cookware and then reduce automatically to the selected power level. Changing the power level setting will cancel the function.

Dual Zone

The Dual Zone function combines two cooking zones and controls them as one, resulting in one larger cooking area. This gives the flexibility to use larger cookware, including roasting pans and griddles.

To get best use of the Dual Zone, cookware needs to fully cover both individual cooking zones. There may be a slightly cooler area in the center between the two cooking zones.

Only the Dual **Power** Zone (on the left side of the cooking surface) allows use of the Power Boost function.

1. Set both knobs of the Dual Zone to power level **9**.

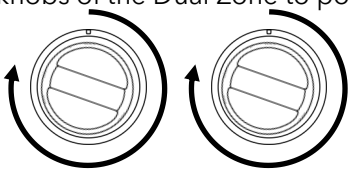

2. Rotate both knobs to the **P** position and hold until the display shows ⊟ on the front cooking zone.

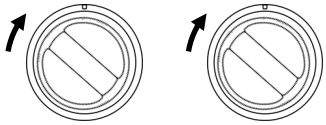

3. Use the front cooking zone knob to adjust the power level of the combined Dual Zone. Rotating the knob of the rear cooking zone will cancel the combination.

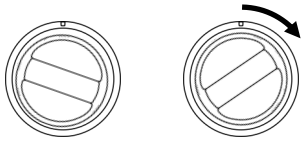

Childlock

To avoid engaging or modifying the settings of the cooking zones, particularly while cleaning, the controls can be locked.

1. Push and turn both knobs on the left simultaneously counter-clockwise until you reach the stop and hold for 3 seconds until the display shows L

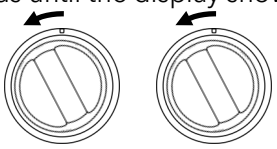

2. To unlock, repeat the same operation. Push and turn both knobs on the left simultaneously counter-clockwise until you reach the stop and hold for 3 seconds until L disappears from the display.

Residual Heat Indication

Heat sensors are located underneath the cooking surface and H will be displayed on the cooking zones that remain hot.

⚠ WARNING

Do not touch the cooking zones and do not put any heat sensitive objects on them if the residual heat indication is displayed.

The symbol H disappears when the cooking zones can be touched without danger.

⚠ AVERTISSEMENT

Ne touches pas les zones de cuisson et ne posez pas d'objets sensibles à la chaleur sur celles-ci si les indicateurs de chaleur résiduelles sont affichés.

Le symbole H disparait lorsque les zones de cuisson peuvent être touchées sans danger.

Standard Racks

Remove

1. Grasp both sides of the front of the rack.
2. Slightly lift the rack up, then pull the rack until the ball tabs on the bottom of the rack clear the rack guide.

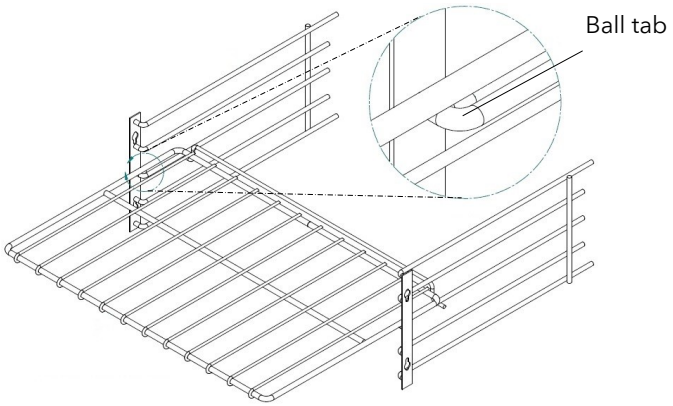

3. Continue to pull the rack all the way out of the oven.

Replace

1. Hold both sides of the rack and align the rack onto the rack guide position you want to use.
2. Push in the rack up to the ball tabs, then slightly lift the rack until the ball tabs are past the front of the rack guide.
3. Set the rack onto the rack guide, then push the rack into the oven the rest of the way until the rear hook tab stops at the rear vertical rack guide bar.

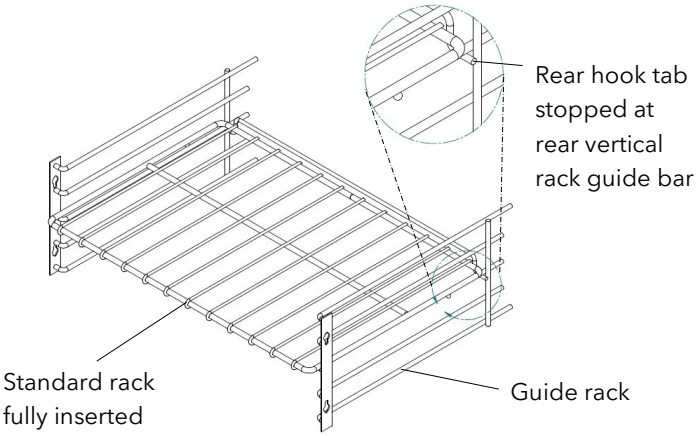

Extension Racks

Remove

1. Push the extension rack all the way into the oven.
2. Firmly grasp all of the slides on both sides of the extension rack. You will need to pull everything out at the same time.
3. As you pull, be sure to slightly lift each time you need to clear the tabs on the rack from the rack guide.

Important: The extension rack is heavy and could drop unexpectedly after you pull it completely from the oven.

4. Carefully pull the extension rack all the way out of the oven.

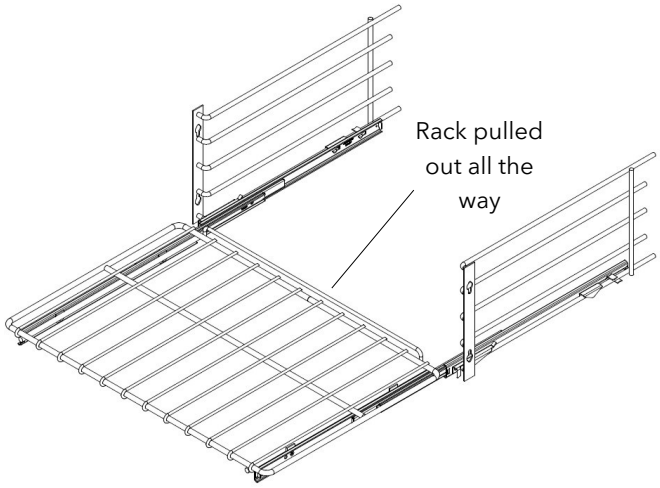

Replace

1. To make sure the extension rack is fully closed, firmly hold the front ends of the rack at your waist, then touch the back of the extension rack to the floor. Slide the front end of the rack downward until the slides are in place.

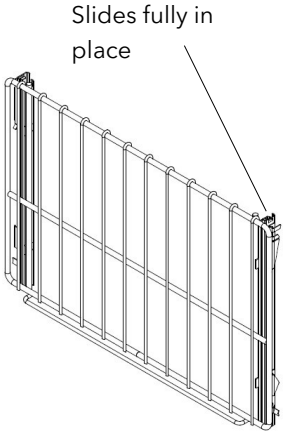

2. Firmly grasp the slides on each side of the extension rack, slightly elevate the rack above the rack guide you want to use, then gently nudge the rack onto the rack guide.
3. Continue to slightly lift the extension rack over the rack guide as each tab reaches the rack guide.
4. When the extension rack is pushed in all the way, make sure it is securely locked in position or it will slide out when the door is opened.

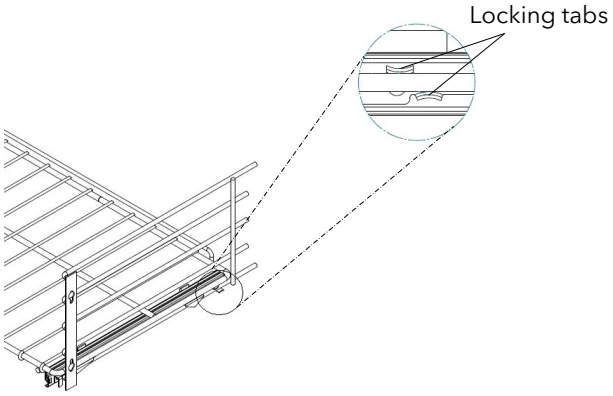

Temperature Probe

The internal temperature probe monitors the core temperature of meat and poultry. In a BSDF48 range, the probe is only available in the large oven. In a BSDF60, it is available in both ovens.

Important: Remove the temperature probe from the oven when not using it to avoid damage.

1. Insert the short end of the temperature probe into the temperature probe socket located on the left front top interior of oven.

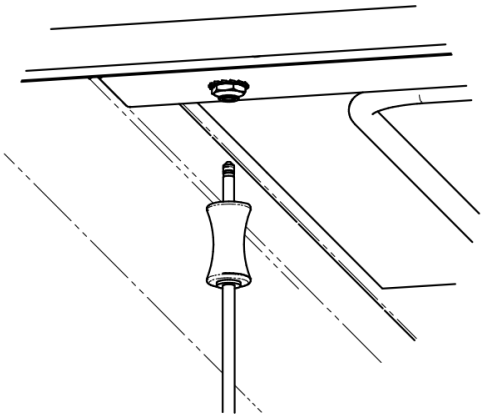

2. Insert the long pointed end of the temperature probe into the thickest portion of the meat. Failure to do so could result in an incorrect temperature reading or indicate the meat is fully cooked before it actually reaches the correct temperature. Avoid touching bones or inserting it all the way through the meat.
3. Select cooking mode. NOTE: Probe mode cannot be used when selecting Broil or Clean.

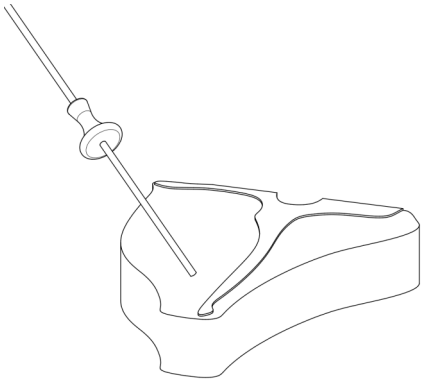

4. Select options.
5. Select Probe.
6. Use the keypad on the Set Probe Temp screen to set the temperature or use the options on the Select Meat screen and the corresponding Type or Preferences on the subsequent screens. Tap **Set**.

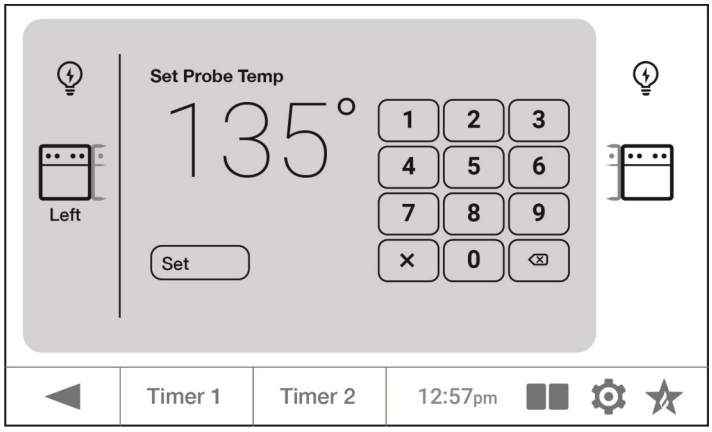

Cooking Guide and Tips

General

- Always use the timer on the oven display so you don’t lose track of time and overcook your food.
- When following recipes, always use the recommended pan size and type. Shiny or reflective pans are best for cakes, quick breads, muffins, cookies and for pies with light golden crusts. Medium gauge aluminum sheets with low or no sides should be used when making cookies.
- Avoid using old or darkened pans. Warped and dented stainless steel and tin coated pans heat unevenly and fail to produce uniform baking results.
- Use cookware that has a combination of both stainless steel and an aluminum core for performance, durability and that has oven compatibility of up to 550°F (287.8°C).
- Only certain types of glass, heat proof ceramic, ceramic earthenware, or other glazed utensils are suitable cooking at higher temperatures in the oven. If not suitable for high heat, the utensils or cookware may break with sudden temperature changes, so depending on the cookware, use only on low or medium heat settings according to the manufacturer's directions.

Cooktop

- Before cooking, make sure the bottom of the cookware is clean and dry.
- Cookware with rough bottoms may damage the cooktop surface. Check the bottom of the cookware before setting it down.
- Lift up the pots and pans to avoid sliding them across the cooktop surface.
- Remove spilled sugar or syrup without waiting for the surface to cool down. Protect your hand with a pot holder, if necessary.
- Salt, sugar or sand may damage the cooktop surface. Never use the cooktop as a working surface or as a storage area.
- Avoid dropping objects, even small ones, on the cooktop surface.
- Plastic or aluminum foil must not contact the hot cooking zones. This may cause breaks or other alterations of the cooktop surface by cooling down. Take them immediately off of the hot cooking zones. Protect your hand with a pot holder, if necessary.
- Never place a hot cookware on the control panel or in the display area to avoid overheating the electronics.
- Make sure that the ventilation of the appliance works according to the manufacturer’s instructions.

Oven

- **Important:** Wait for pre-heat cycle to be completed before placing food in the oven. All of the elements are on during pre-heat and food may burn.
- If preheat is not required, a bypass option is available. After selecting the cooking mode, the display screen will indicate preheat on or off. Press OFF to bypass the preheat. Not using preheat will result in longer cooking times.

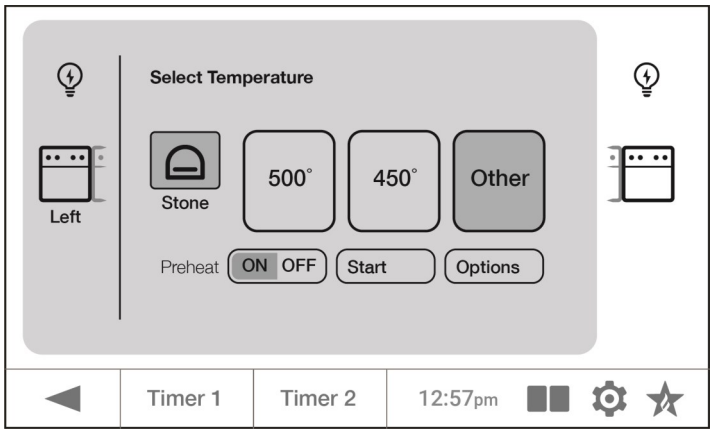

- Center items on oven racks evenly for even baking.
- When loading the oven, work as quickly as possible to prevent loss of heat.
- When practical, cook the item that requires the lowest temperature first then gradually raise the temperature for each additional item.
- Roast meat with the fat side facing up to self-baste and shrink less.
- Keep the oven free from grease buildup to avoid fire.
- Avoid using aluminum foil in the oven and do not place it on the bottom of the oven as it could cause damage.
- After using the oven, do not touch the appliance until it is completely cooled.

Oven Rack Positions

Selecting the proper rack position is important and depending on where you place your food, it could make or break your recipe. For example, baking a pizza on the top rack will not provide an extra crispy bottom crust or baking a single rack of cookies on the bottom rack could mean darker cookies than you prefer. Ideal rack positions will help deliver optimal results for all your meals, whether baking, roasting or broiling.

Below is a general guideline for rack positions:

Top – For rich and even browning, stick with the top rack especially when broiling foods like salmon and steak. In broil mode, all the heat is generated from the broil element that is positioned on top of the oven. In bake mode, the element is located on the bottom of the oven, but heat still rises, making the top rack warmer than the others. So, when baking dishes that you want to brown or crisp, like casseroles and gratins, the top rack will provide the best results.

Middle – If unsure of which rack position to use, it is best to stick with the middle rack as it is positioned in the center of all the heating elements. For most baking and roasting, the middle rack will cook food more evenly. Keep in mind that this rule applies for single rack cooking only when you are making one dish at a time.

Bottom – If you want to brown the underside of your roasted vegetables, bread or crusty pizza, move the rack to the lowest position closest to the heat source. It is especially beneficial to start fruit pies on a preheated baking sheet in the bottom rack because it helps the bottom crust get nicely browned.

Source: Epicurious.com, Recipes, Menu Ideas, Videos & Cooking Tips

You may find that your new oven cooks differently than the old one. Take a few weeks to get comfortable and familiar with your new oven. Do not use thermostats such as those found in grocery stores to check your oven temperatures. These thermostats may vary by 40° F (4° C) or more.

Temperature Operating Ranges

Important: Entering a temperature outside the range given for an applicable cooking mode will result in an error message.

Mode	Default Temperature	Temperature Set Range	Best Used For
Bake	350°F (177°C)	100°F – 500°F (38°C – 260°C)	Single rack cooking, baked goods, and casseroles
Convect Bake	350°F (177°C)	100°F – 500°F (38°C – 260°C)	Pies and pastries
Roast	375°F (191°C)	100°F – 500°F (38°C – 260°C)	Pork shoulder, chuck roast, beef tips and flank steak
Convect Roast	375°F (191°C)	100°F – 500°F (38°C – 260°C)	Beef, pork, poultry and lamb
Convect	325°F (163°C)	100°F – 500°F (38°C – 260°C)	Multi-rack cooking (cookies and baked goods)
Broil	HIGH (550°F, 288°C)	350°F – 550°F (178°C – 288°C)	Meats, fish and poultry
Proof	95°F (35°C) and 120°F (49°C)	95°F – 135°F (35° C – 57°C)	Bread dough and pizza dough
Dehyd	105°F (41°C) and 155°F (68°C)	95° F – 160° F (35° C – 71° C)	Vegetables, fruits, herbs, aromatics and meats for drying/jerky
Probe	None	100° F – 200° F (38° C – 93° C)	Beef, pork, poultry, lamb, chops, tenderloins, seafood and casseroles

Convection

True convection cooking uses a fan inside the oven, along with a heating element around the fan, to increase air circulation throughout the oven cavity. This results in even heat distribution and a more consistent temperature, which cooks food more efficiently.

In addition to Convect mode, this oven offers Bake and Convect Bake modes. Bake mode is similar to a conventional baking method where most of the heat is generated from the bottom bake element. In Convect Bake mode, the heat from the bottom element is circulated throughout the oven with the aid of the convection fan that is mounted on the back wall of the oven.

Any time a convection mode is selected, food will cook faster than a standard mode because the fan will be utilized, so as a general rule when cooking with standard recipes, do one of the following:

- Reduce the temperature by 25° (-4° C)
- Reduce the duration of the cooking time by approximately 25%

What's best in each mode? Use the chart below as a guide. As a general rule, Convect mode is best for multiple rack cooking (except when baking cakes, quick breads, custards or souffles) and can also be used to cook multiple dishes at one time on multiple racks. Convect Bake mode is best for browning, roasting and quick baking and Bake mode is best for cakes, brownies, quick breads, custards and souffles as well as covered dishes, which do not benefit from convection cooking. When in doubt, use Convect mode as it is generally a good "go to" mode that will work for almost any recipe.

Food Item	Pan Size/Type	# of Pans	Mode	Temp	Cook Time	Rack Position*
Muffins	Muffin Tin (12-Cup)	3	Convection	325°F (163°C)	13-15 minutes	1, 3, 5
Whole Yeast Bread	Loaf Pan (9 x 5")	4	Convection Bake	325°F (163°C)	20-25 minutes	3, 5
White Yeast Rolls	Cookie Sheet	2	Convection	325°F (163°C)	10 minutes	2, 4
		3	Convection	325°F (163°C)	10 minutes	1, 3, 5
Cupcakes	Muffin Tin (12-Cup)	2	Convection	325°F (163°C)	15-17 minutes	2, 4
		3				1, 3, 5
Layer Cakes	Round Pan (9")	4	Convection	325°F (163°C)	25-30 minutes	2, 4
Drop Cookies	Cookie Sheet	2	Convection	325°F (163°C)	8-10 minutes	3, 5
		3				1, 3, 5
Rolled Cookies	Cookie Sheet	2	Convection	325°F (163°C)	8-10 minutes	3, 5
		3				1, 3, 5
Frozen Pizza (12" Round)	Cookie Sheet	2	Convection Bake	350°F (177°C)	12-14 minutes	2, 4

*Rack positions start with one as the bottom rack and five as the top rack.

Roast and Convection Roast

Roast and convection roast are best used for caramelization of vegetables, crispy skin on poultry, or a crust on a tenderloin or roast. When using the Roast and Convect Roast modes, the broil element on the top, the convection fan and heating element on the bottom will be engaged. They are also the perfect modes to use with the temperature probe.

- Always roast meats fat-side up, on a roasting rack, in a shallow pan. Use a pan that fits the size of the food being prepared. No basting is required when the fat side is up. The fat renders in the oven and self-bastes the protein. It is not necessary to add water or liquid as that creates steam and prevents the browning necessary when roasting.
- Place poultry breast side up in a shallow pan, on a rack, that fits the size of the food being prepared. Brush poultry with melted butter or oil before roasting.
- Tall side pans are not recommended when using Convect Roast mode as they interfere with the heated air circulation over the food.
- Do not cover food when using the Convect Roast mode.
- When using the temperature probe, insert the probe halfway into the center or thickest part of the food being prepared. For poultry, insert the probe (between the body and leg) into the thickest part of the inner thigh. Avoid touching bone, fat or the bottom of the pan.
- It is okay to remove the food being prepared from the oven 5-10 degrees before it hits the programmed temperature. The meat continues to cook when removed from the oven. This is called carry-over cooking and can be utilized for 10-15 minutes. It's always important to let the meat rest after cooking.

Broil

Broiling is a method of cooking that exposes food to direct radiant heat. Unlike baking and roasting, which use indirect hot air to thoroughly cook food throughout, broiling uses high heat from a direct heat source to quickly cook food. Broiling is ideal for achieving the perfect char on meats or vegetables.

Important: The broiler is an extremely hot burner. It is recommended that you watch your food closely. It is important to keep a close eye on the oven to prevent overcooking food as food cooks very quickly and can burn at that high temperature.

- Determine your rack position before you start cooking. It's recommended to start on a lower rack and move it up as necessary. Do not place food closer than 2″ (50.8mm) from the broiler element to prevent burning.
- Preheat your broiling pan. Bring your broiling pan up to temperature by placing it inside the oven during the preheat cycle. This will help sear your food evenly and seal in flavors.
- Use oil or nonstick spray. Avoid or use extreme caution with parchment paper, which tends to burn at the high temperatures needed for broiling.
- Do not use aluminum foil to line greasy foods cooking with the broil mode as fats and grease can melt off and quickly catch fire.
- Spread your food out so that the surface of every piece is exposed to the heating element to ensure even cooking and browning. It is also best to cook foods of even thickness.
- Start or finish larger foods using the broil mode. It is best to avoid broiling for longer than 10 minutes, as this could lead to burnt food. For foods with longer cooking times, it's best to use the Broil mode to create a crispy crust, either at the beginning or end of the cooking process. For the rest of your cooking, move food to the center of the oven and set to Bake or Roast mode at a temperature of 300-450°F (149-232°C).
- Go light on marinades and heavy on spices. Avoid heavy marinades, especially oil-based ones, as those drippings cause intense heat and can burn or possibly catch fire.

Broil Guide

Food Item	Doneness	Qty and/or Thickness	Rack Position	First Side Time (minutes)	Second Side Time (minutes)	Tips/Tricks
Ground Beef	Well Done	1 lb. (4 patties) 1/2-3/4 thick	5	4-5	3-4	Space evenly. Up to eight patties can be done at a time.
Beef Steaks	Rare	1/2 lb., 1" thick	4	4	2-3	Steaks less than 1" thick cook through before browning. Pan frying is recommended first. Score fat.
	Medium	1/2 lb., 1" thick	4	4	3-4	
	Well Done	1/2 lb., 1" thick	4	4	4-4	
	Rare	2-2 1/2 lbs. 1 1/2" thick	3	10	4-6	
	Medium	2-2 1/2 lbs. 1 1/2" thick	3	12	6-8	
	Well Done	2-2 1/2 lbs. 1 1/2" thick	3	14	8-10	
Chicken		1 whole cut-up 2-2 1/2 lbs. Split lengthwise	2	20	6-8	Broil skin-side down first
		2 Breasts	4	8-9	5-6	
Lobster Tails		2-4 10-12 oz each	2	12-14	Do not turn over.	Cut through back of shell. Spread open. Brush with melted butter before broiling and again halfway through broiling.
Pork Chops	Well Done	2, 1/2" thick	4	7	4-6	Score fat.
	Well Done	2, 1" thick	3	9-10	6-8	
Lamb Chops	Medium	2, 1" Thick 10-12 oz.	4	6	4-6	Score fat.
	Medium	2- 1 ½ " Thick	4	8	6-8	
Salmon Steaks		2- 1" Thick	4	7-8	4-6	Grease pan. Brush steaks with melted butter.
		4- 1" Thick	3	9	4-6	
Fish Fillets		¼ - ½" thick	4	5	2-4	Handle and turn very carefully. Brush with lemon butter before and during cooking, if desired.

*Rack positions start with one as the bottom rack and five as the top rack.

Proof

It is often difficult to maintain a consistent temperature in your home to proof doughs for baking breads, especially when the outside temperatures can be either too warm or too cold. The Proof mode solves that by providing a very low heat to maintain a gentle climate for yeast to grow. The convection fans do not run while proofing to keep dough from drying out before it fully rises.

Any baked good that contains yeast should be proofed to produce the air bubbles that make leavened foods taste light and fluffy, including:

- Breads such as sourdough, whole-grain, rye country-style, and even gluten-free
- Enriched breads including breads enriched with sugar, fat, and sometimes eggs, such as brioche and challah.
- Italian focaccia and pizza
- Raised donuts
- Cinnamon rolls
- Morning buns
- Viennoiserie, which are baked good such as brioche, croissants and Danish pastries

Dehydrate

Dehydrating is an excellent way to preserve food and make healthy snacks with fruits, vegetables and herbs right from your garden. You can also make delicious jerky as well. The Dehyd mode delivers a low consistent heat that provides the perfect environment to reduce the moisture content from food. The oven has preset temperatures to customize the temperature as needed.

Times will vary depending on the thickness of the product as well as the moisture content. Some fruits are better for dehydrating than others. Bananas, for example, have a satisfying crispy texture, along with a sweet flavor when dried. Apples, mangos, papaya, pineapple, cherries, strawberries, plums and apricots are also great choices. Savory fruits like tomatoes are best for sun drying. You can also dehydrate vegetables like zucchini or green beans for a tasty and healthy snack.

Suggested temperature for dehydrating various foods are as follows:

Item	Temperature
Herbs, Flowers and Dough	105°F (41°C)
Soft Vegetables	113°F (45°C)
Hard Vegetables	122°F (50°C)
Citrus Peels	131°F (55°C)
Fruit	155°F (68°C)
Jerky	158°F (70°C)

Cooking Guide and Tips

Food Safety Tips

Safe steps in food handling, cooking, and storage are essential in preventing food-borne illness. You can't see, smell, or taste harmful bacteria that may cause illness. In every step of food preparation, follow these four guidelines to keep food safe:

- **Clean** – Wash hands and surfaces often.
- **Separate** – Keep raw meat apart from other foods.
- **Cook** – Cook to the right temperature.
- **Chill** – Refrigerate food promptly.

Cook all food to these minimum internal temperatures as measured with the temperature probe before removing food from the oven. You may choose to cook food to higher temperatures. A holding temperature of 140°F (60°C) or higher is recommended for food safety.

Category	Food	Temperature	Rest Time
Ground Meat, Stuffing, and Meat Loaf	Beef, Pork, Veal, Lamb	160°F (71°C)	None
	Turkey, Chicken	165°F (74°C)	None
Fresh Beef, Veal, Lamb	Steaks, Roasts, Chops	145°F (63°C)	3 minutes
Poultry	Chicken and Turkey (breasts, whole bird, legs, thighs, wings, ground poultry, giblets, and stuffing)	165°F (74°C)	Whole: 10-15 minutes Breasts: 5 minutes
Pork and Ham	Fresh Pork	145°F (63°C)	3 minutes
	Fresh Ham (raw)	146°F (63°C)	3 minutes
	Precooked Ham (to reheat) Note: Reheat cooked hams packaged at USDA-inspected plants .	140°F (60°C) 165°F (74°C) if not from USDA-inspected plants	None
Eggs and Egg Dishes	Eggs	Cook until yolk and white are firm.	None
	Egg Dishes (such as frittata, quiche)	160°F (74°C)	None
Leftovers and Casseroles	Leftovers and Casseroles	165°F (74°C)	None
Seafood	Fish with fins	145°F (63°C) or cook until flesh is opaque and separates easily with a fork.	None
	Shrimp, Lobster, Crabs, Scallops	Cook until flesh is pearly or white and opaque.	None
	Clams, Oysters, Mussels	Cook until shells open during cooking.	None

Source: FoodSafety.gov, United States Food Safety and Inspection Service, as of April 2019.

High Altitudes

For helpful information on cooking in high altitudes, visit: https://www.fsis.usda.gov/food-safety/safe-food-handling-and-preparation/food-safety-basics/high-altitude-cooking.

Common Baking Problems and Solutions

Problem	Causes	Corrections
Cookies and biscuits burn on the bottom	• Cookies and biscuits are put into oven before the preheating time is completed. • Dark pan absorbs heat too fast • Oven door opened too often • Incorrect rack position being used, and pan is too close to the heat source	• Allow oven to preheat to the selected temperature before placing food in the oven • Set timer to shortest recommended time. Use a medium weight aluminum baking sheet • Check on cookies through oven window instead of opening oven • Use recommended rack position • Try standard or convection bake instead
Cookies and Biscuits too dark on the top	• Rack position being used is too high • Oven not preheated • The pan's sides are too high • Aluminum foil was used and distributed the heat unevenly	• Use recommended rack position • Allow oven to preheat fully • Use recommended pan size based on recipe • Remove foil
Cakes too dark on top or bottom	• Cakes put into oven before preheated time is completed • Rack position is too high or low • Oven is too hot	• Allow oven to fully preheat • Use recommended rack position • Set oven temperature 25° F (-4° C) lower than recommended
Cakes not done in center	• Oven is too hot • Incorrect pan size • Pan not centered in the oven	• Set oven temperature 25° F (-4° C) lower than recommended • Use recommended pan size based on recipe • Use proper rack position and place pan so there is 2"-4" of space on all sides of pan
Cakes are not level	• Batter was unevenly spread • Oven or racks are not level • Warped pan • Pan too close to oven wall or rack overcrowded	• Spread batter evenly and tap to release air bubbles • Place a marked glass measuring cup filled with water on the center of the oven rack. If the water level is uneven, refer to instructions for leveling the range • Be sure to allow 2"-4" of clearance on all sides of each pan in the oven
Cakes crack on top	• Wrong pan size used • Batter was too thick • Oven temperature was too high	• Use recommended pan size for recipe • Follow recipe and double check liquid • Set oven temperature 25° F (-4° C) lower than recommended
Pies are burnt around edges and not done in center	• Oven was too hot • Too many pans were used • Dark, heat absorbing pan was used	• Set oven temperature 25° F (-4° C) lower than recommended • Reduce number of pans being used • Use shiny reflective pans
Pies are too light on top	• Oven is not hot enough • Overcrowded oven or rack	• Set oven temperature 25° F (-4° C) higher than recommended • Reduce number of pans

Care and Cleaning

Important: Make sure the appliance is cool before you clean.

Material	Cleaning	Need to Know
Ceramic Glass Cooktop Surface	• Allow the cooking surface to cool down. • For spills and burned-on food, use a metal scraper with a clean blade, holding it at 45-degree angle. • Put a small amount of multi-surface cleaner cream on a damp towel or soft cloth, scrubbing in a circular motion. Add more cleaner if needed, completely removing it all with a clean damp paper towel. • For everyday cleaning and touch-ups, dilute a mild detergent, such as dishwashing liquid, with water, and spray it over the surface. • Use a soft sponge or a damp towel to clean the cooktop. • Restore the cooktop's aspect with a soft, dry cloth.	• Before cooking, make sure the bottom of the cookware is clean and dry. • Lift up the cookware to avoid sliding it across the cooktop surface. • Remove spilled sugar or syrup without waiting for the surface to cool down. Protect your hand with a pot holder, if necessary. • Do not use abrasives such as mineral scouring pads, scouring powders, or harsh chemical cleaners on your cooktop surface.
Stainless Steel	• Clean with stainless steel cleaner and follow the cleaner manufacturer's instructions.	• Do not use steel wool, metal pads, or abrasive cleaners. • Do not use a metal knife, spatula, or any metal tool to scrape these surfaces. • Do not permit citrus or tomato juices to sit and dry on these surfaces as citric acid will discolor the surface. Wipe such spills immediately. • Do not polish across the grain or in circles. • Discoloration may occur with heavy use.
Painted Metal	• Use a soft cloth and a quality glass cleaner or warm soapy water.	• Do not use steel wool, metal pads, or abrasive cleaners. • Do not use a metal knife, spatula, or any metal tool to scrape these surfaces. • Do not permit citrus or tomato juices to sit and dry on these surfaces as citric acid will discolor the surface. Wipe such spills immediately. • Do not use paper towels or other coarse cloths.
Plated Finishes (Brass, Copper, Chrome, Oil-Rubbed Bronze, Pewter)	• The parts were treated with a protective clear coat to prevent aging or discoloration. This clear coat will last the life of the appliance unless the coating is removed. • Clean with a microfiber cloth using Endust, Pledge, or something similar.	• Do not use a metal knife, spatula, or something similar or any metal tool to scrape these surfaces. • Do not permit citrus or tomato juices to sit and dry on these surfaces as citric acid will discolor the surface. Wipe such spills immediately. • Do not use harsh cleaners (such as Brite Boy) as these will remove the coating and cause the metals to discolor.

Material	Cleaning	Need to Know
Oven Window	• When the oven is cool, use a cloth and warm soapy water to clean the interior oven door window. Rinse with clear water and dry thoroughly.	• Do not clean the oven door gaskets. Damage to the material or the door seal may occur.
Porcelain-Coated Oven Interior	• For spot cleaning, use a commercial oven cleaner. Be sure to follow the cleaner manufacturer's instructions before you start. • Make sure the area is well-ventilated when using a commercially available oven cleaner. • To loosen tough baked-on stains, lay a cloth soaked in hot water on the area for several minutes.	• Do not use the commercial oven cleaner on the door gasket, igniter, or ceramic broiler. • Do not use steel wool or metal pads as they may damage or scratch the enamel coating. • Make sure cleaning chemicals do not come in contact with any stainless steel or painted surfaces.
Oven Racks	• Make sure the oven is cool before you take out the oven racks. • Wash the racks in hot, soapy water, rinse in clear water, then dry thoroughly.	• N/A
Broiler	• N/A	• Do not clean the broiler surface or permanent damage may occur.
Temperature Probe	• When the temperature probe is cool, wipe the probe clean with mild soapy water, rinse, then dry thoroughly.	• Do not immerse the temperature probe in water or put it in the dishwasher.

Troubleshooting

Check these helpful tips for any problems with your oven. If additional help or service is needed, please call customer service at (800) 449-8691. You will need to have the model and serial numbers for your appliance ready before you contact them. See Product Information on page 4 for information on finding these numbers.

Problem	Possible Cause	Solution
Cooktop doesn't turn on	• No electrical power to the appliance.	• Plug into a properly grounded three-prong electrical outlet. • Check and reset the circuit breaker for the appliance.
Cooking zone(s) switch off	• The cookware overheating protection has been triggered. • The cooktop system overheating protection has been triggered.	• Let the cooktop cool down.
Automated heat up function doesn't start	• The cooking zone is still too hot (**H** displayed). • The highest power level **9** or Power Boost **P** is set.	• Let the cooking zone cool down. • Set a lower power level.
Fan of the cooktop system is running when the cooktop is turned off	• Cooktop has not cooled to 113° F (45° C) or lower.	• Let the cooktop cool down.
Oven is on, but is not heating	• No electrical power to the appliance.	• Plug into a properly grounded three-prong electrical outlet. • Check and reset the circuit breaker for the appliance.
Oven light is not on	• No electrical power to the appliance. • Oven light bulb is burned out.	• Check and reset the circuit breaker for the wall outlet used for the appliance.
Convection fan is making noise	• Mounting screws on the fan cover are loose.	• Tighten screws.
Convection fan does not turn	• No electrical power to the appliance.	• Plug into a properly grounded three-prong electrical outlet. • Check and reset the circuit breaker for the appliance.
Fan behind the control panel is running when the oven is turned off	• Oven has not cooled to 200° F (93° C) or lower.	• Let the oven cool down.
Touchscreen is not lit	• No electrical power to the appliance. • Sabbath mode is on. • Clock is turned off.	• Check and reset the breaker/fuse. • Cancel Sabbath mode. • Check whether the clock is turned off.

Problem	Possible Cause	Solution
Touchscreen displays the following:		
• Control Error F20	• Control board or wiring issue	• Call 800-449-8691 for service
• Control Error F40	• Oven temperature sensor issue	• Call 800-449-8691 for service
• Probe Error F50	• Meat probe issue	• Call 800-449-8691 for service
• Fan Error F60	• Cooling fan issue	• Call 800-449-8691 for service
• Temp Error F80	• High temperature issue	• Call 800-449-8691 for service
• Probe Not Detected	• Meat probe is not detected	• Insert meat probe
• Set Temp Between 90°F and 200°F	• Meat probe temperature setting is outside of the acceptable range.	• Change probe temperature setting
• Set Between 100°F and 500°F	• Temperature setting is outside of the acceptable range.	• Change temperature setting
• Remove Probe	• Meat probe has been detected in Broil or Clean modes.	• Remove meat probe.
Cooktop indicators display the following		
• U is displayed	• Cooktop cannot detected an appropriate cookware.	• There is no cookware on the cooking zone. • The cookware isn't adapted to the induction. • The size of the cookware bottom is too
• **E2** is displayed	• The cooktop system overheated.	• Let the cooktop cool down.
• **E6** is displayed	• Voltage of the electrical power connected to the appliance too low. • Cooktop system issue	• Plug into a properly grounded three-prong electrical outlet. • Call 800-449-8691 for service
• **E8** is displayed	• Cooling fan issue	• Call 800-449-8691 for service
• **Er47** is displayed	• Cooktop system issue	• Call 800-449-8691 for service
• Other **E** symbol is displayed	• Cooktop system issue	• Call 800-449-8691 for service

Warranty

Prizer-Painter Stove Works, Inc. ("Prizer-Painter") warrants your BlueStar appliance ("product") purchased in the U.S. and Canada and installed in residential properties for normal residential use.

What Is Covered

Subject to the specific conditions and limitations below, this warranty covers parts and/or labor necessary to repair or replace any part of the product that contains defects in materials and workmanship.

Two Year Warranty. For two (2) years from the date of installation, this warranty covers all parts and labor necessary to repair or replace any part on the product except for the Cosmetic Component Warranty below.

Cosmetic Component Warranty. For thirty (30) days from the date of installation, this warranty covers scratches and dents, paint and porcelain blemishes, visible chips, etc.

Limitations of Coverage

- Floor Models. For one (1) year from the date of installation, this warranty covers all parts and labor necessary to repair or replace any part on the product except for cosmetic parts for which there is no warranty.
- The replacement of a part under this warranty does not extend the warranty period.
- Warranty service outside normal business hours and in areas beyond 50 miles one way from an authorized BlueStar retailer or service provider. The owner will be responsible for any and all costs associated with additional mileage, non-standard service or overtime, and special equipment required to remove the product so service may be performed.

This warranty is void:

- If the product is removed from where it was originally installed.
- If the original factory installed serial number is altered or removed from the product.
- If gas cooking products are converted by someone other than a BlueStar authorized service company.

What Is Not Covered

This warranty does not cover, and specifically excludes:

- Product installed or used in any commercial or other non-residential property such as, but not limited to, day care facilities, fire stations, hotels, nursing homes, etc.
- Installation related issues including or installation inconsistent with the product specifications/ installation instructions.
- Damage or repairs caused by alterations or modifications, abuse, misuse, neglect, or improper installation, mounting, handling, operation, maintenance, or storage.
- Normal adjustments after installation and setup.
- Normal wear, care, and maintenance of the product as described in this manual.
- Service calls to educate the customer on the proper use and care of the product.
- Consumable parts.
- Damage or repairs caused by unauthorized service or repairs, including unauthorized adjustments or calibrations performed on the product.
- Accidental or intentional damage.
- Damage or repairs as a result of natural disasters, fires, floods, earthquakes, winds, lightning, corrosive atmosphere, loss of electrical power to the product for any reason, or other conditions beyond Prizer-Painter's control.
- Damage or repairs caused by alteration for outdoor use.
- Damage or repairs caused by the use of harsh chemicals or cleaning products improperly applied.
- Damage to surrounding property including cabinetry, floors, ceilings, etc.
- Consequential or incidental damage, including but not limited to food or medicine loss, time away from work, restaurant meals, etc.

The terms of this warranty provide for repair of the product only. If the product cannot be repaired, Prizer-Painter, at its sole discretion, will determine whether to exchange the product.

Please see the Arbitration Clause and Related Provisions, which affect your legal rights. The Arbitration Clause is available at www.bluestarcooking.com.