36" TRANSITIONAL ELECTRIC COOKTOP

CE365T/S

FEATURES

- Accommodates different pans sizes easily due to two elements and three zones
- Controls performance with high-frequency pulsation technology
- Revel in a true simmer setting for soups, sauces, and more
- Set it super-low for fine chocolate and other delicate foods
- Designed to stand on its own and integrate nicely into any style
- Offers both True Simmer and Melt settings
- Cleanup is a snap with the black ceramic glass surface

COOKTOP SPECIFICATIONS

- Stainless-Steel Trim
- Black ceramic glass surface
- Triple-zone, dual zone and bridge-zone elements
- True simmer and melt settings
- 1 - 1,050/1,950/2,700 W element
- 1 - 700/2,200 W element
- 1 - 1,200 W element
- 2 - 1,800 W elements with bridge

Specifications are subject to change without notice. This information was generated on March 28, 2025. Verify specifications prior to finalizing your cabinetry/enclosures.

36" TRANSITIONAL ELECTRIC COOKTOP

PRODUCT SPECIFICATIONS

Model	CE365T/S
Dimensions	36"W x 3 1/2"H x 21"D
Weight	52 lbs
Electrical Supply	3-wire, 240 VAC, 60 Hz
Electrical Service	50 amp dedicated circuit
Conduit Length	4 Feet

ELECTRICAL

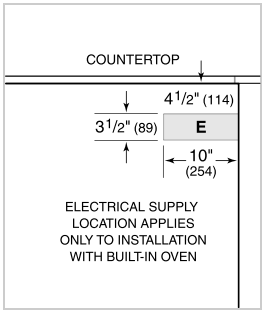

NOTE: Dimensions in parenthesis are in millimeters unless otherwise specified

DIMENSIONS

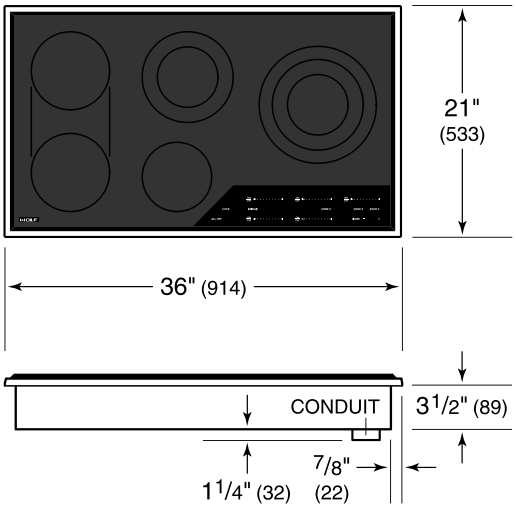

STANDARD INSTALLATION

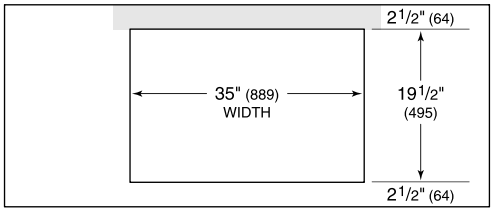

COUNTERTOP CUT-OUT

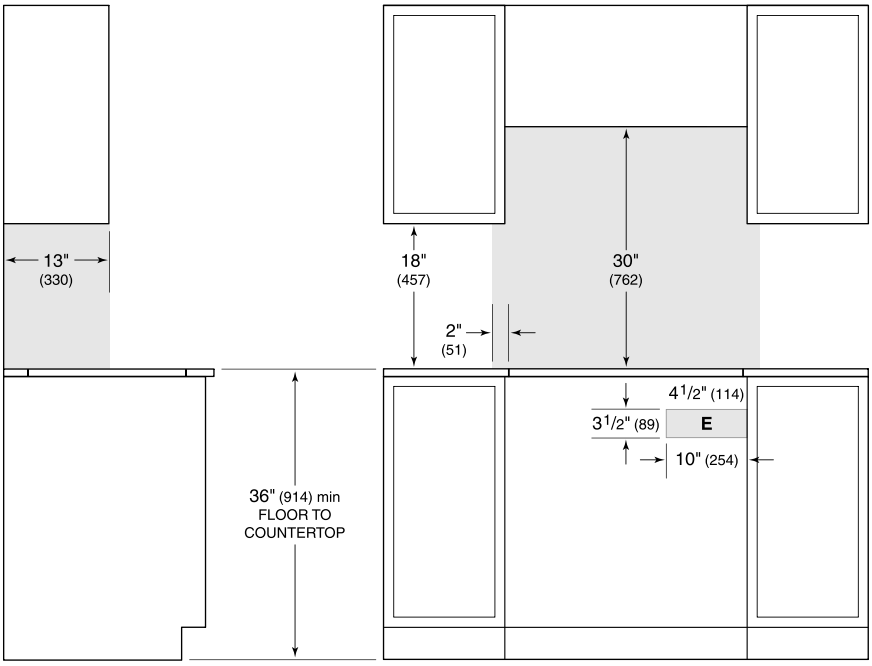

SIDE VIEW

FRONT VIEW

NOTE: Shaded area above countertop indicates minimum clearance to combustible surfaces, combustible materials cannot be located within this area.
Electrical supply location only applies to installations with built-in oven.