48" CLASSIC FRENCH DOOR REFRIGERATOR/FREEZER - PANEL READY

CL4850UFD/O

FEATURES

Split Climate™ intelligent cooling system revolutionizes Sub-Zero's already-superior preservation capabilities, keeping food even fresher for longer

ClearSight™ LED lighting system fully illuminates the interior and reduces shadows

Sleek stainless accents trim the interior, matching the sophistication of the exterior

Touch control panel is conveniently located for easy access at the tap of a finger

Night Mode optimizes the interior lighting based on the detected ambient light, reducing the brightness by 90% in dim environments

Lift the base of the flip-up dairy compartments to store taller items on the shelf below

Activate Max Ice Mode to temporarily increase ice production

Position adjustable door bins at various heights to accommodate assorted items

The base of the expandable freezer basket conveniently slides out of the way, offering customizable storage for taller items below

Wi-Fi enabled for convenient remote access using the Sub-Zero Group Owner's App

Sub-Zero offers an industry-leading full two-year warranty on appliances, along with a full five-year sealed system warranty

ACCESSORIES

90° Door Stop

Air Purification Cartridge

Custom Front Panel Mounting Kit

Custom Side Panel Mounting Kit

Egg Container

Grille Frame - 84"

Pro Handle

Stainless Steel Flush Inset Grille Panel

Stainless Steel Side Panel

Tubular Handle

Water Filter

Stainless Steel Flush Inset Door and Drawer Panels with Pro Handle

Stainless Steel Flush Inset Door and Drawer Panels with Tubular Handle

Classic Stainless Steel Pro Louvered Grilles

Stainless Steel Pro Handles

Stainless Steel Tubular Handles

Stainless Steel Kickplate

Accessories are available through an authorized dealer.
For local dealer information, visit subzero-wolf.com/locator.

HANDLE ACCESSORIES

PRO

TUBULAR

PRODUCT DETAILS

REFRIGERATOR

- 7 glass refrigerator shelves (6 adjustable; 1 stationary)
- 4 crisper drawers with removable dividers
- 6 refrigerator door bins (4 adjustable; 2 stationary)
- 2 flip-up dairy compartments
- Air purification system
- LED refrigerator and freezer lights

FREEZER

- Full-extension drawer with expandable freezer basket
- Water filtration system
- Automatic ice maker with removable ice container

Specifications are subject to change without notice. This information was generated on October 9, 2024. Verify specifications prior to finalizing your cabinetry/enclosures.

48" CLASSIC FRENCH DOOR REFRIGERATOR/FREEZER - PANEL READY

PRODUCT SPECIFICATIONS

Model	CL4850UFD/O
Dimensions	48"W x 84"H x 24"D
Refrigerator Capacity	21.4 cu. ft.
Freezer Capacity	7.5 cu. ft.
Weight	702 lbs
Electrical Supply	115 VAC, 60 Hz
Electrical Service	15 amp dedicated circuit
Plumbing Supply	1/4" OD copper, braided stainless steel or PEX tubing
Plumbing Pressure	35–120 psi
Receptacle	3-prong grounding-type

ELECTRICAL

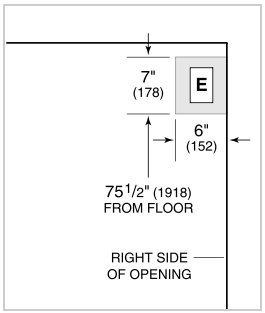

PLUMBING

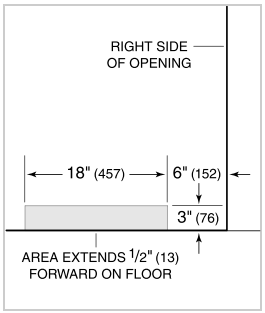

PANEL SPECIFICATIONS For complete panels specifications including width/height, weight requirements, thickness requirements and offset details visit subzero-wolf.com/builtinconfigurator.

NOTE: Dimensions in parenthesis are in millimeters unless otherwise specified

INTERIOR VIEW

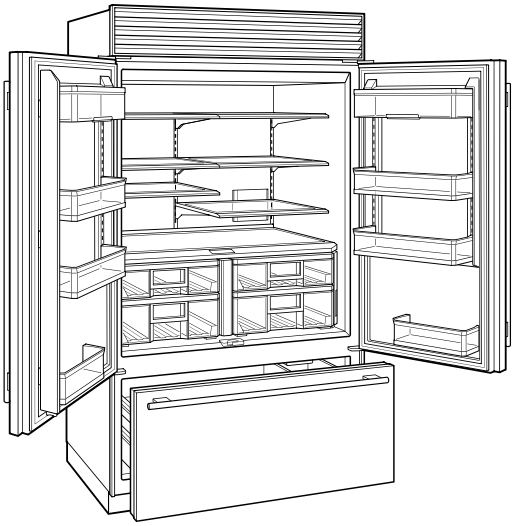

This illustration is intended for interior reference only and may not represent the exterior of the model being specified.

DIMENSIONS

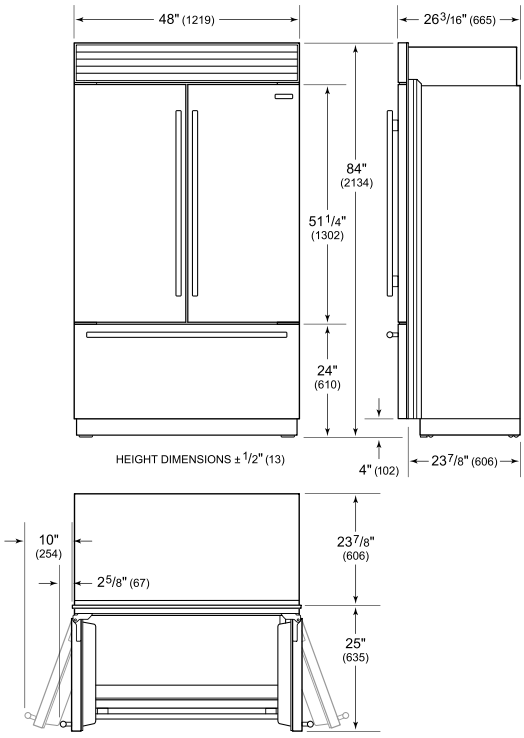

STANDARD INSTALLATION

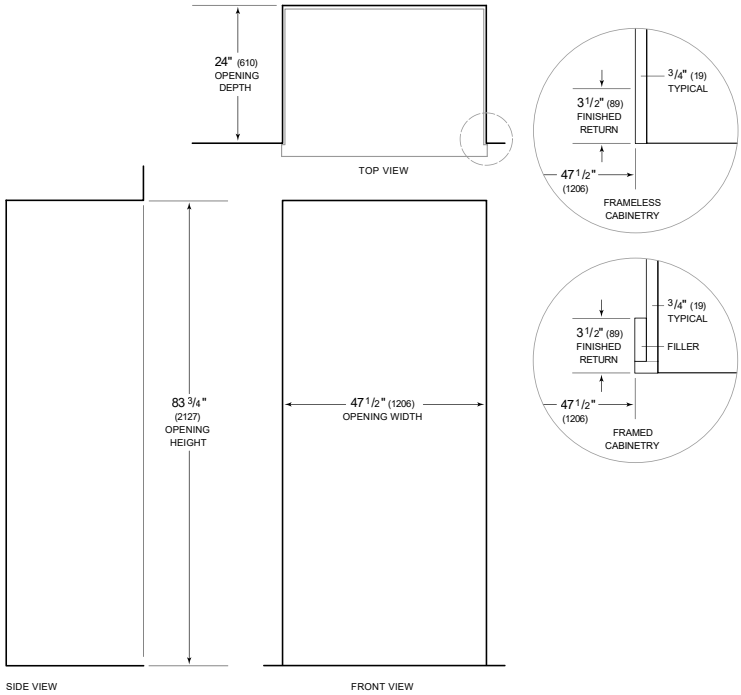

NOTE: 3 1/2" (89) finished returns will be visible and should be finished to match cabinetry
Shaded line represents profile of unit.