SUMMIT

CR2B122

3.38" x 21.25" x 18" (H x W x D)

2-burner 120V electric cooktop designed for portrait or landscape installation, with coil elements and stainless steel finish

Highlights:

Innovative design allows the cooktop to be mounted in portrait or landscape style to accommodate any setup

Two-burner electric cooktop with 120V operation

Fits popular 20" x 16" counter cutouts

Product Features:

Versatile placement	Specially designed to be mounted portrait or landscape style with controls being easy to read and manage in either direction
Stainless steel finish	Surface is made from stainless steel for an attractive and easy to clean look
Fits popular cutout size	Designed for built-in installation in 20" x 16" cutouts
Two heating elements	One 900W 7" coil element and one 500W 5 1/2" coil element
115V operation	Designed to work with standard 115V/60Hz electrical supplies with proper grounding
Push-to-turn knobs	Prevents accidents by requiring a small amount of force to turn on cooktop heat
Indicator lights	Operating indicators light up to show which burner is in use
Cord included	Ships with 3-pronged cord
ADA compliant design	Upfront controls and easy-to-operate knobs offer easier accessibility

SUMMIT

CR2B122 Specifications:

Overview	
Nominal Height	3.38" (9 cm)
Height of Cabinet	3.38" (9 cm)
Nominal Width	22.0" (56 cm)
Width	21.25" (54 cm)
Nominal Depth	18.0" (46 cm)
Depth	18.0" (46 cm)
Cabinet	Stainless Steel
US Electrical Safety	ETL
Canadian Electrical Safety	ETL-C
Amps	20.0
Voltage/Frequency	115 V AC/60 Hz
Weight	5.0 lbs. (2 kg)
Parts & Labor Warranty	1 Year
UPC	761101050478
Electric Cooktop	
Heating Type	Radiant
Surface	Stainless Steel
Element Type	Coils
Number of Elements	2
Controls	Dial
Countertop Cutout Height	3.0" (8 cm)
Countertop Cutout Width	20.0" (51 cm)
Countertop Cutout Depth	16.0" (41 cm)
Element #1 Size	5.5" (14 cm)
Element #1 Wattage	500.0
Element #2 Size	7.0" (18 cm)
Element #2 Wattage	900.0
Power Cord Included	Yes

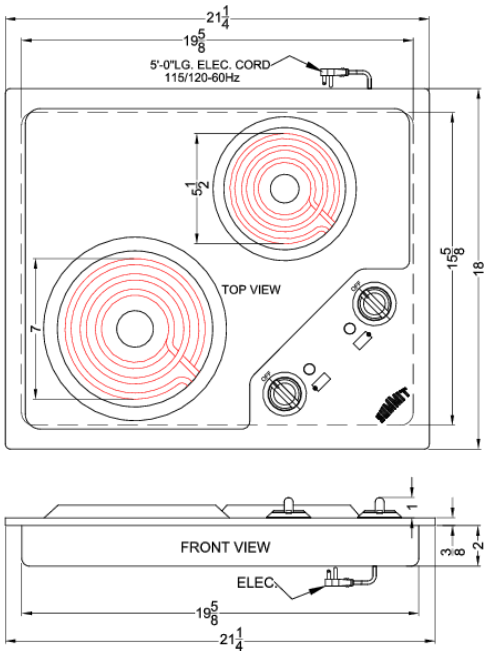

ACCUCOLD DIVISION, FELIX STORCH, INC. | ISO 9001:2015 Certified
770 Garrison Avenue Bronx, NY 10474 USA **TEL** 718-893-3900 **FAX** 844-478-8799
info@accucold.com **www.accucold.com**