KEG CAPACITY OF STANDARD 3-DOOR CABINETS

KEG CAPACITY OF STANDARD 3 DOOR CABINETS (4 HALF BARRELS)

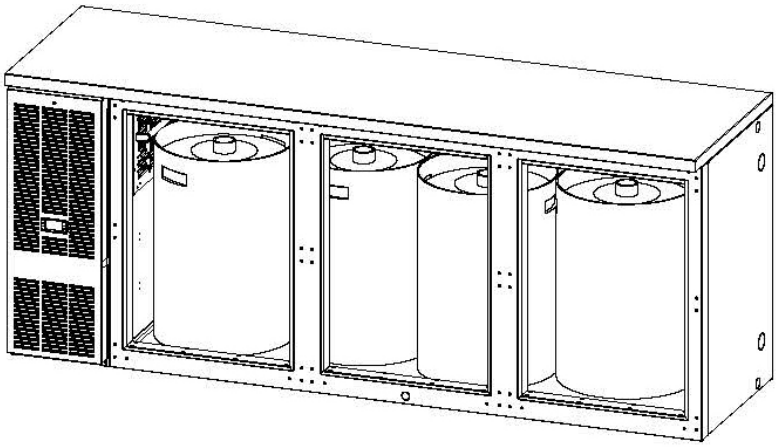

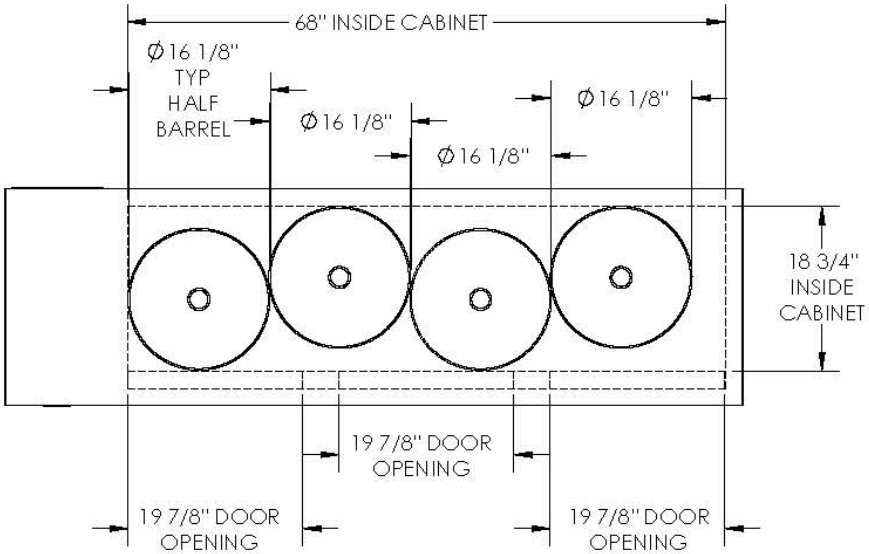

KEG CAPACITY OF STANDARD 3-DOOR CABINETS

KEG CAPACITY OF STANDARD 3 DOOR CABINETS (3 HALF BARRELS, 2 SLIM QUARTER BARRELS)

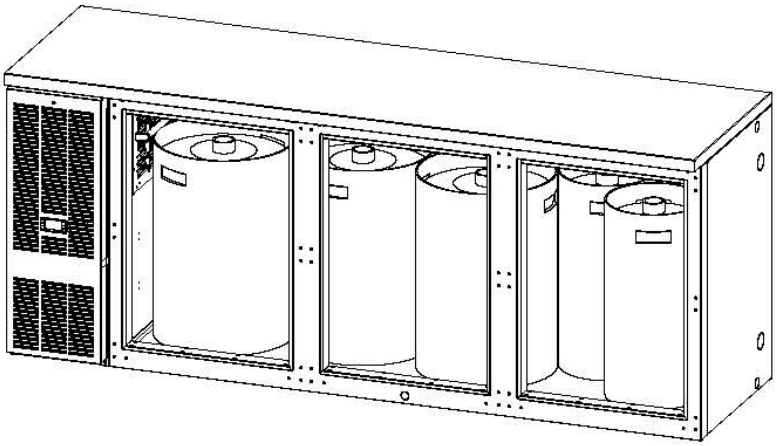

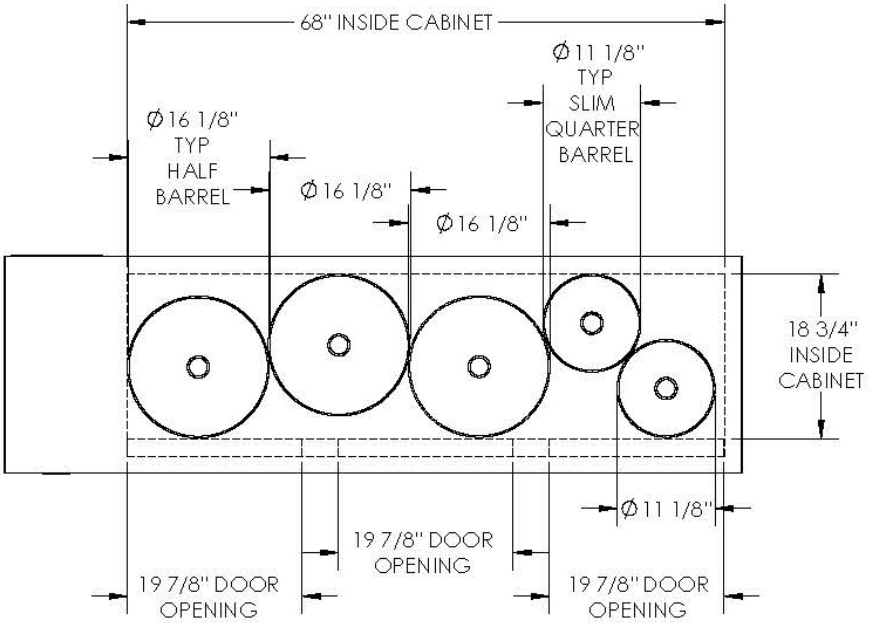

Perlick®

KEG CAPACITY OF STANDARD 3-DOOR CABINETS

KEG CAPACITY OF STANDARD 3 DOOR CABINETS (2 HALF BARRELS, 4 SLIM QUARTER BARRELS)

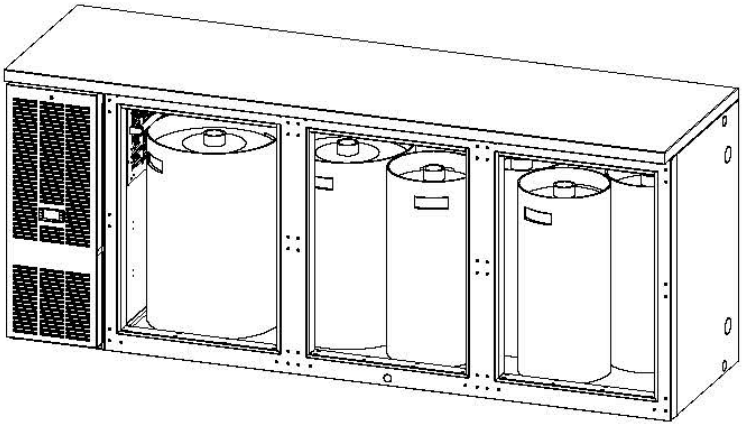

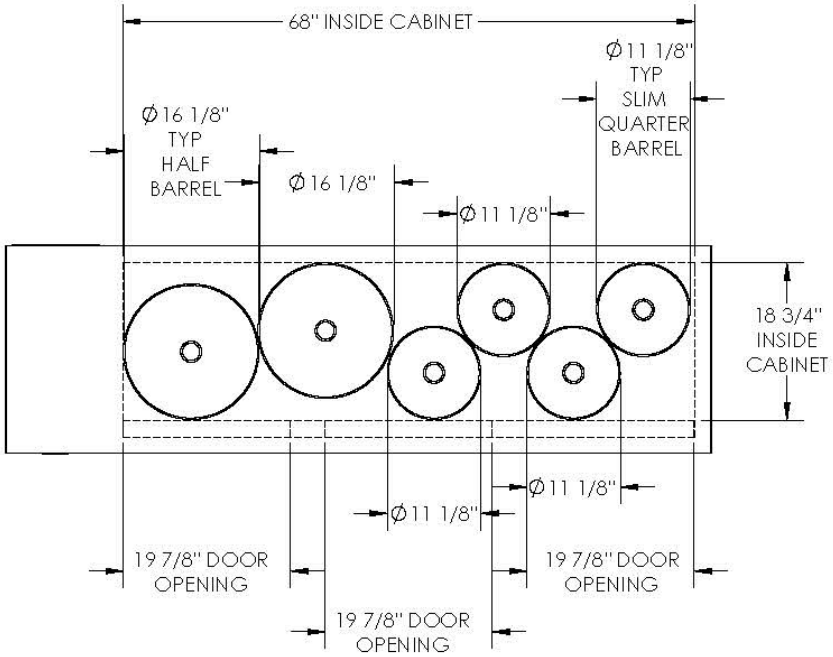

Perlick®

KEG CAPACITY OF STANDARD 3-DOOR CABINETS

KEG CAPACITY OF STANDARD 3 DOOR CABINETS (1 HALF BARREL, 6 SLIM QUARTER BARRELS)

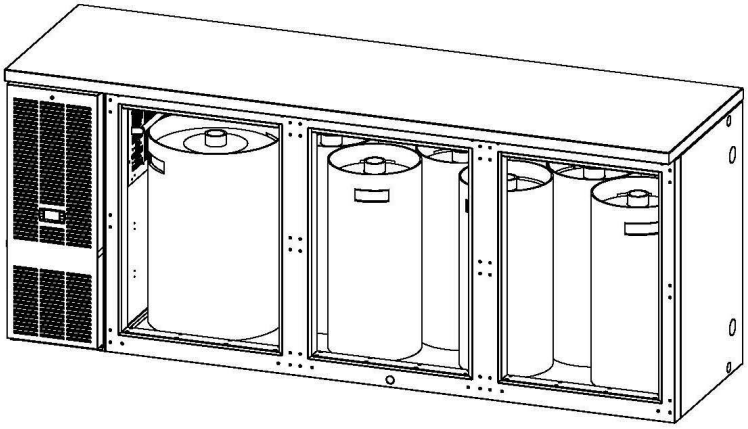

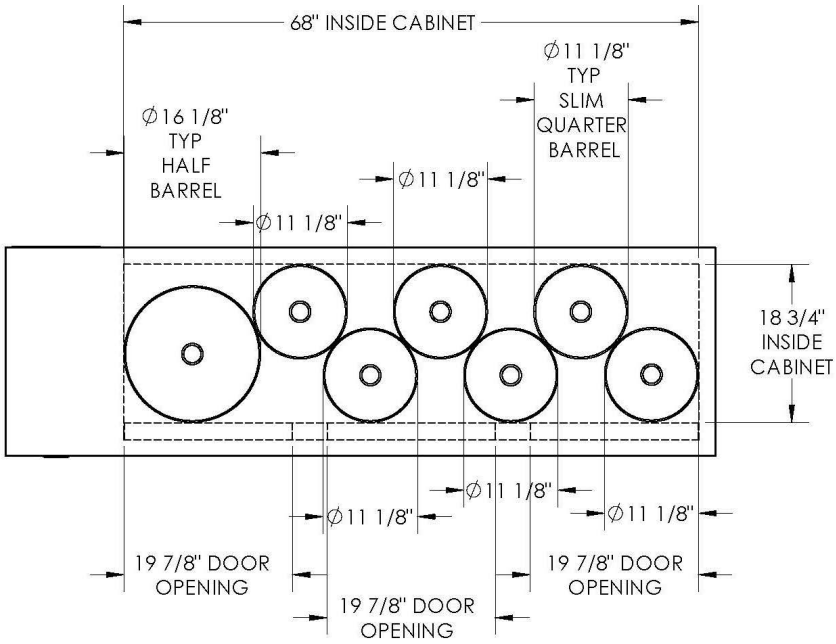

KEG CAPACITY OF STANDARD 3-DOOR CABINETS

KEG CAPACITY OF STANDARD 3 DOOR CABINETS (7 SLIM QUARTER BARRELS, 1 SIXTH BARREL)

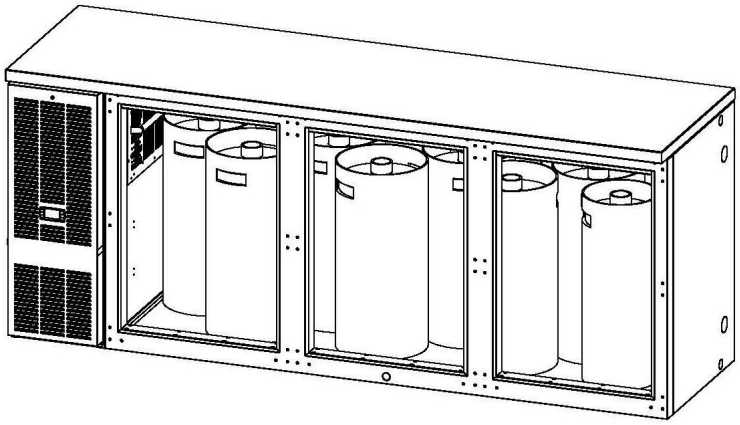

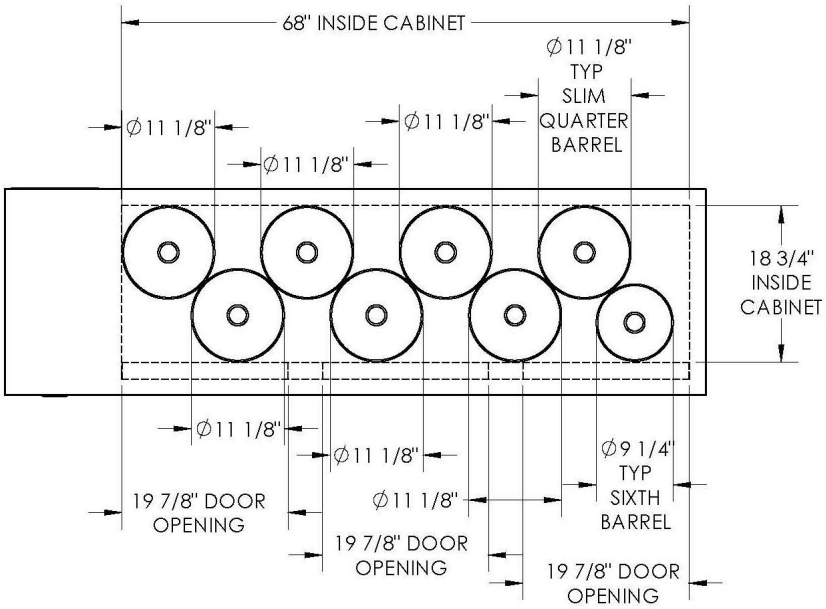

KEG CAPACITY OF STANDARD 3-DOOR CABINETS

KEG CAPACITY OF STANDARD 3 DOOR CABINETS (3 HALF BARRELS, 4 SIXTH BARREL)

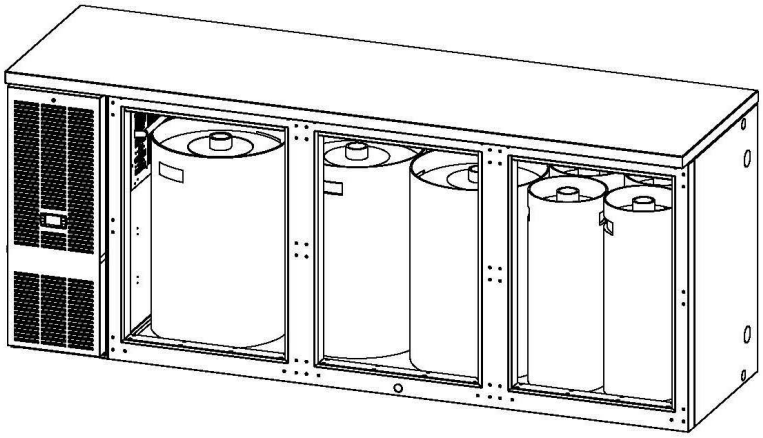

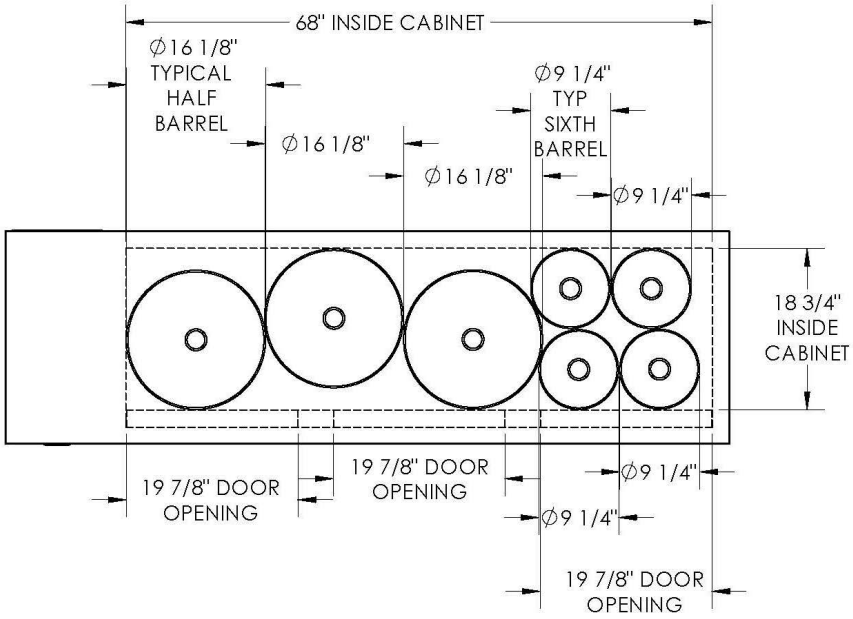

KEG CAPACITY OF STANDARD 3-DOOR CABINETS

KEG CAPACITY OF STANDARD 3 DOOR CABINETS (2 HALF BARRELS, 7 SIXTH BARREL)

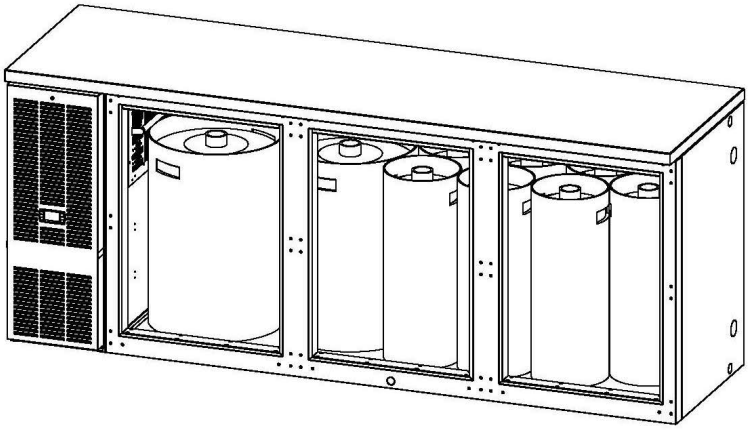

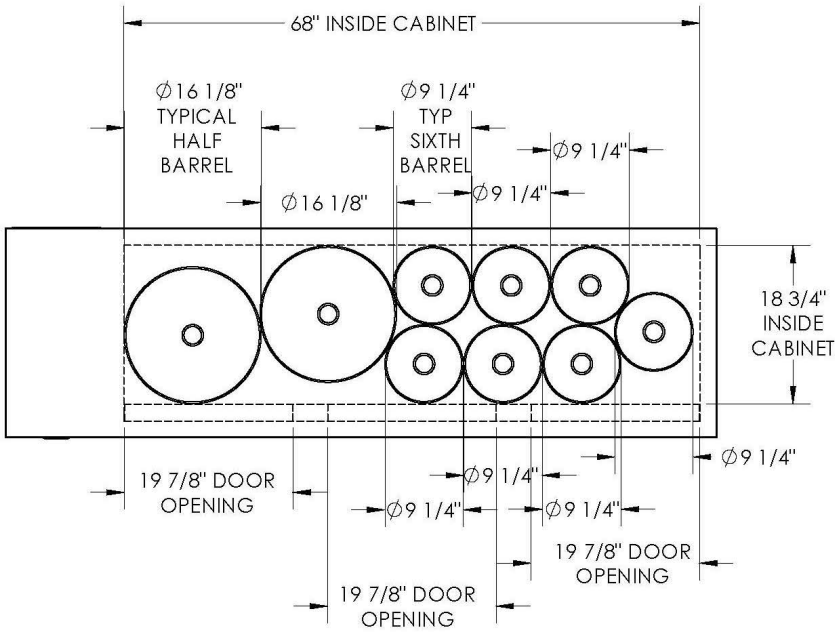

Perlick®

KEG CAPACITY OF STANDARD 3-DOOR CABINETS

KEG CAPACITY OF STANDARD 3 DOOR CABINETS (14 SIXTH BARRELS)

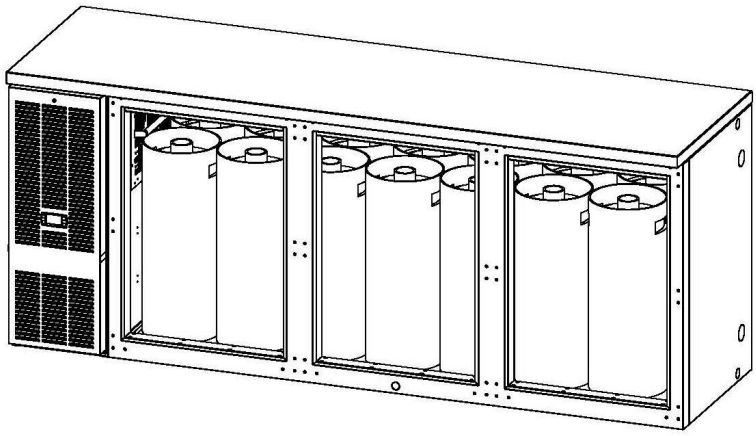

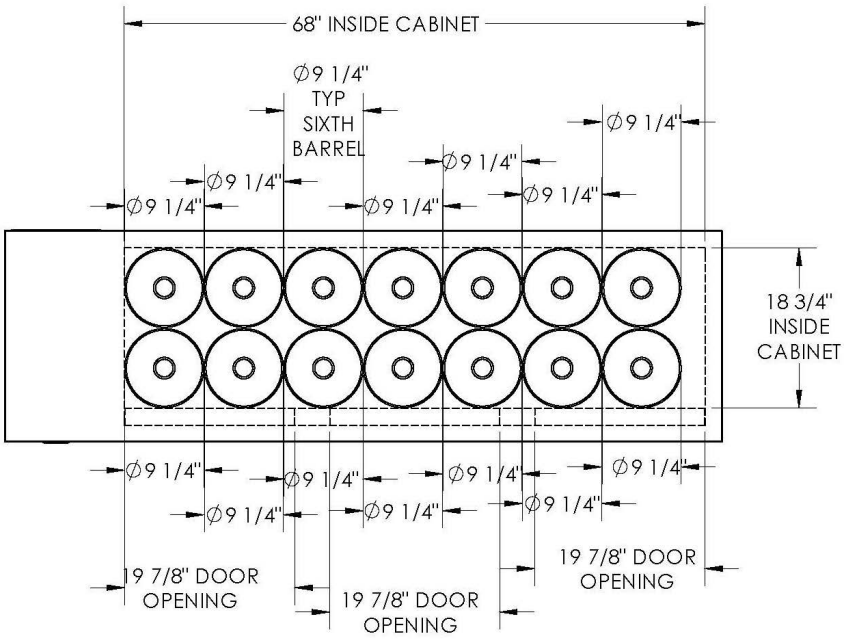

Perlick®

KEG CAPACITY OF STANDARD 3-DOOR CABINETS
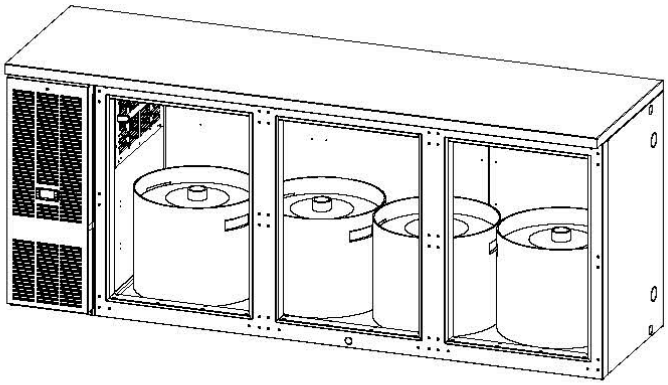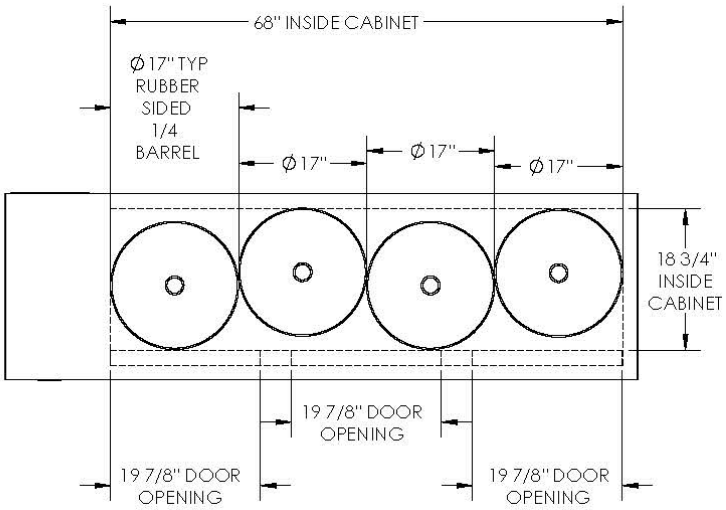
KEG CAPACITY OF STANDARD 3 DOOR CABINETS (4 SPECIAL RUBBER SIDED QUARTER BARRELS 17" DIA PONY)