Ellipse Dual Mount Sink - EOMB33229-1 | 114.0699.561

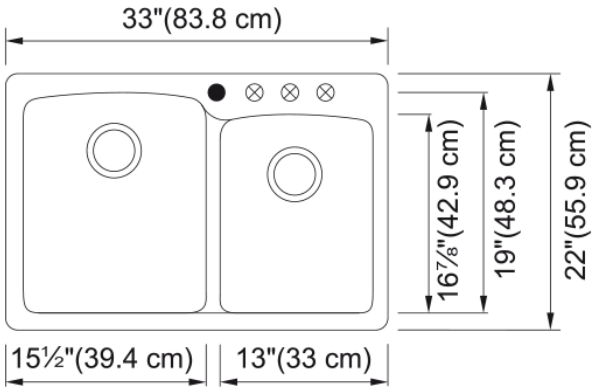

33-in. x 22-in. Matte Black Fragranite Dual Mount Double Bowl Kitchen Sink. Ellipse Fragranite sinks are durable, resistant to scratches, stains and heat.

Aspect	
Sink type	Sink
Type of material	Granite
Number of bowls	2
Color	Matte black
Surface finsh	None
Product Dimensions	
Length (right to left)	33
Width (front to back)	22
Large bowl size: right to left	15.669
Large bowl size: front to back	18.858
Large bowl: depth	9.016
Small bowl size: right to left	12.992
Small bowl size: front to back	16.89
Small bowl: depth	7.992
Installation	
Minimum cabinet size	33''
Product specifications	
Installation type	Topmount / drop in
Drain hole	3 1/2"
Position of drainer	No drainer
Product identification	
Product brand	NEUTRAL
Collection	Ellipse
Certified by	IAPMO
Features	
Drainers number	No drainer
Product reversibility	No

Faucet ledge	Yes
Strainer assembly included	No
Strainer Assembly	No waste kit
Overflow	No
Number of faucet holes	4 - pre-scored
Soap dispenser hole	No