Maris Topmount Sink - MAG6201515-MBK | 114.0686.995

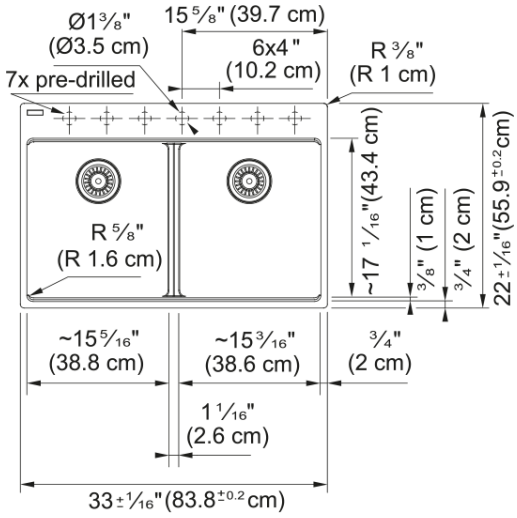

33.0-in. x 22.0-in. Matte Black Fragranite Double Bowl Kitchen Sink. Maris sinks are equipped with deep capacity bowls that can easily fit baking trays, pots, and pans to be washed with maximum ease. With our easy-to-use integrated ledge system, you'll accomplish more with your sink while making the most of your surrounding counter space. The rear drain maximizes the usable surface of the bowl and creates extra cabinet space beneath the sink. Maris Fragranite sinks are scratch-resistant, fade-resistant, and impact resistant and will retain their new appearance for years.

Aspect	
Sink type	Sink
Type of material	Granite
Number of bowls	2
Color	Matte black
Surface finsh	None
Product Dimensions	
Length (right to left)	32.992
Width (front to back)	22.008
Large bowl size: right to left	15.252
Large bowl size: front to back	16.732
Large bowl: depth	9.488
Small bowl size: right to left	15.252
Small bowl size: front to back	16.732
Small bowl: depth	9.488
Installation	
Minimum cabinet size	36''
Product specifications	
Installation type	Topmount / drop in
Drain hole	3 1/2"
Position of drainer	No drainer
Product identification	
Product brand	FRANKE
Product family	Maris
Collection	Maris
Certified by	IAPMO

Features

Drainers number	No drainer
Product reversibility	No
Faucet ledge	Yes
Strainer assembly included	No
Strainer Assembly	No waste kit
Overflow	No
Number of faucet holes	7 - pre-scored
Soap dispenser hole	No