UF48B-LPD4

Undercounter 48” Low Profile Freezer with Four Drawers

UF48B-LPD4
12/02/24
Item # 13724

W x D x H
48” x 30” x 31.9”*
*with 2.25” casters

Item #: _____
Project: _____
Qty: _____
AIA#: _____

Features

- **Specifically designed to fit under an ADA compliant 34” work surface height counter**
- **Engineered to maintain NSF-7 temperatures in 100°F ambient**
- **Stainless steel exterior front, sides and top with stainless steel interior sides, back, and floor**
- Environmentally friendly R290 hydrocarbon refrigerant
- Cabinet and drawers are insulated with 2” CFC free, foamed in place polyurethane
- Drawer slides are constructed of 16 gauge stainless steel with acetal rollers
- Drawer frames are formed of 14 gauge stainless steel and securely fastened in the cabinet
- Bottom drawers will accommodate (1) ½ size pan & (1) 1/3 size pan. Top drawer will accommodate (1) ½, (1) 1/3, (1) ¼ , and (1) 1/6 size pans. Alternate pan orientation (top drawers only) provides (1) full size pan positioned front-to-back and (3) 1/9 size pans
- Top and bottom drawers allow for 6” deep pans
- Extruded aluminum flush mount drawer handle
- Magnetic drawer gasket is easily removable for cleaning
- Drawers have a 175 lb. dynamic load rating
- Hot gas condensate removal
- E-coated evaporator coil
- Standard with 2.25” casters (two with brakes)
- 10 ft. cord and plug

Dimensions / Capacity	Two-Section UF48B-LPD4
Interior Storage Capacity (CF) (AHAM)	12 ft^3
Overall Width x Depth (including 1” bumper)	48” x 31”
Height (including 2.25” casters)	31.9”
Drawer Opening Width x Height	19.5” x 23”
Depth with Drawer Fully Open (including 1” bumper)	51”
Crated Weight	331 lbs.
Crated Length x Width x Height	52.5” x 34” x 35.5”

Electrical / Refrigeration	Two-Section UF48B-LPD4
Voltage	115/60/1
HACR Breaker	15.0 Amps
Electrical Connection (NEMA)	5-15P
Voltage Range	104-126
Ambient Temp. Range	45° to 100°F
Control Setpoint Range	-18° to 10°F
Amperage	4
Energy Consumption (kWh/day) @ASHRAE	3.60
Heat Rejection (BTU/Hr.) @NSF	756
Approx. Nominal Compres. BTU/HR (HP)	1426(1/3+HP)
Refrigerant / Charge Amount (oz)	R290 (2.6 oz)

Options

- ☐ 4” Casters (HS-5035, set of 4)
- ☐ 6” Casters (HS-5036, set of 4)
- ☐ Drawer Liner (HS-5738, upper)
- ☐ Drawer Liner (HS-5739, lower)
- ☐ Overshelves (HS-5173 single)
- ☐ Overshelves (HS-5164 double)
- ☐ Drawer divider bar (HS-4007, vertical)
- ☐ Drawer divider bar (HS-5432 horizontal)
- ☐ Stainless steel back panel (factory request)

HOSHIZAKI WORRY-FREE WARRANTY*
FIVE years LABOR | SIX years PARTS
SEVEN years COMPRESSOR

Valid in United States, Canada, Puerto Rico and U.S. Territories. *Please visit hoshizakiamerica.com/support/warranty/ for more information.

If GFCI is required, a GFCI breaker MUST be used in lieu of GFCI receptacle

Hoshizaki reserves the right to change specifications without notice.

© HOSHIZAKI AMERICA, INC.
618 Hwy, 74 S., Peachtree City, GA 30269 | TEL 800-438-6087 | FAX 800-345-1325 | www.hoshizakiamerica.com

UF48B-LPD4

Undercounter 48” Low Profile Freezer with Four Drawers

UF48B-LPD4
12/02/24
Item # 13724

FRONT VIEW

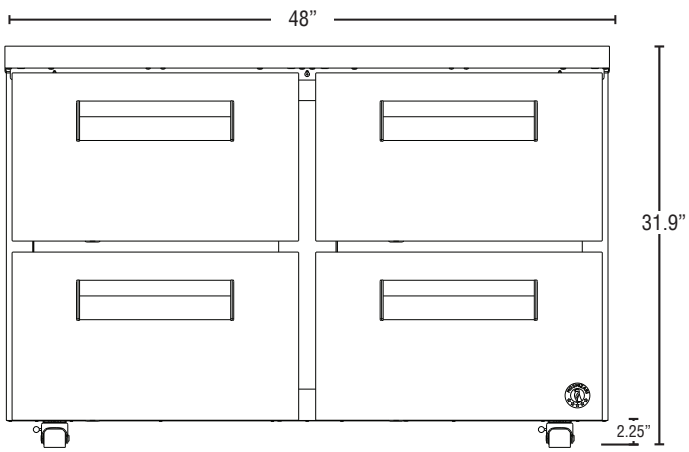

SIDE VIEW

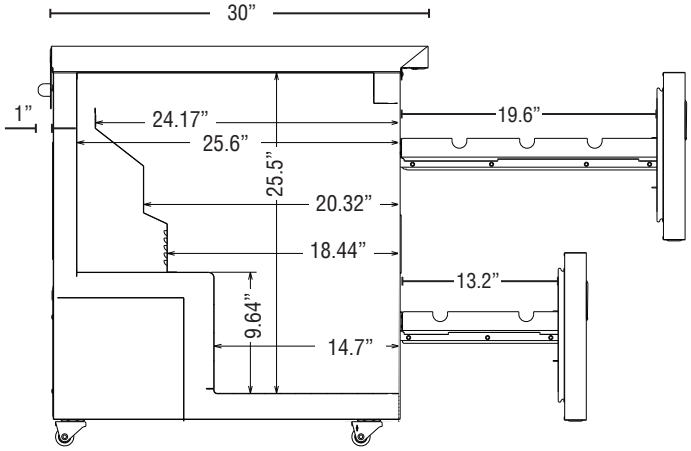

PLAN VIEW

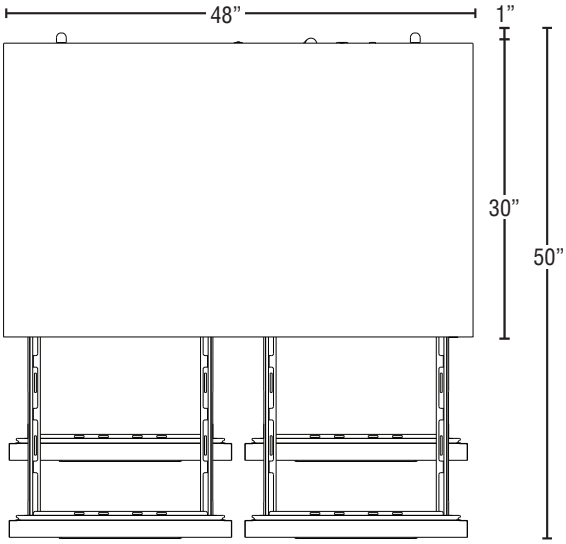

Cabinet Construction

The exterior cabinet top, front, and sides, are constructed of high quality stainless steel. The exterior back and bottom are constructed of coated steel. The cabinet interior features stainless steel back, sides, and floor with an ABS top. One heavy duty epoxy coated shelf per section is standard. Mounted on anodized aluminum pilasters the shelves are adjustable in ½” increments. Cabinet walls are insulated with 2” CFC free, foamed in place polyurethane. 2.25” polyolefin, stem casters (two with brakes) are standard.

Drawer Construction

Drawer fronts are constructed of high grade stainless steel inside and out and drawers are insulated with 2” free foamed in place polyurethane. Drawer frames are formed of 14 gauge stainless steel and securely fastened in the cabinet. The drawer slides are 16 gauge stainless steel with acetal rollers to prevent metal to metal contact between the drawer slides and reduce wear. The drawer slides have a dynamic load capacity of 175 lbs. and have been life tested (fully loaded) three hundred thousand openings and closings without showing significant wear. The flush mount handles are constructed of extruded aluminum. Snap-in magnetic drawer gaskets are durable and easily removed for cleaning. Bottom drawer will accommodate (1) 1/2 size pan & (1) 1/3 size pan. Top drawer will also accommodate (1) 1/2, (1) 1/3, (1) 1/4, and (1) 1/6 size pans - HS-5432 is required for this configuration. Alternate pan orientation on top drawer only will accommodate (1) full size pan front-to-back and (3) 1/9 size pans. The top and bottom drawers will accommodate 6” deep pans.

Refrigeration System

The high efficiency refrigeration system is self-contained with an E-coated evaporator for extended life. Condensate removal is accomplished with an energy efficient non-electric evaporation system. A capillary tube controls the flow of environmentally friendly R290 refrigerant through the evaporator. Refrigeration system utilizes an “off cycle” defrost to eliminate any ice on the evaporator coil. 115 volt units are equipped with a ten foot cord and plug (20.0 amps or less).