MANITOWOC ICE
2110 SOUTH 26TH STREET, MANITOWOC, WI 54220
800-545-5720
WWW.MANITOWOCICE.COM

# Wiring Diagram

**USP0100A**

**AIR-COOLED SELF-CONTAINED - 1 PHASE**

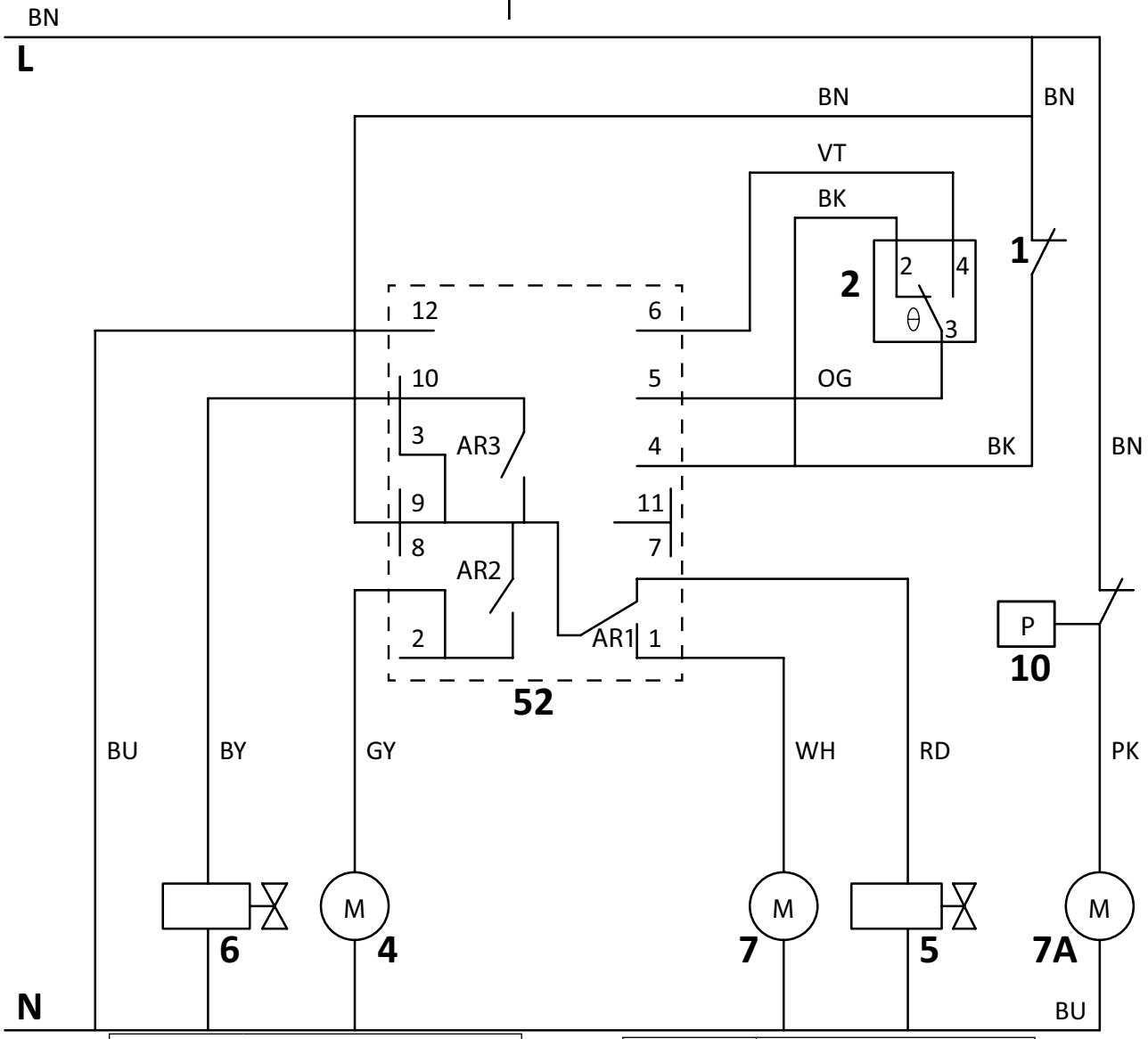


| Wire Colors | |
|---|---|
| BK | Black |
| BN | Brown |
| BU | Blue |
| GY | Grey |
| OG | Orange |
| PK | Pink |
| RD | Red |
| VT | Violet |
| RD | Red |
| WH | White |

| Number | Component |
|---|---|
| 1 | Bin Thermostat |
| 2 | Evaporator Thermostat |
| 4 | Compressor |
| 5 | Harvest Valve |
| 6 | Water Inlet Valve |
| 7 | Water Pump |
| 7a | Condenser Fan Motor |
| 10 | Fan Cycle Control |
| 52 | Electronic Timer |